HollySys

LE Series

Programmable Logic Controller

Hardware Manual

3.8.1 Technical Specifications....63
3.8.2 Module Structure Diagram....66
3.8.3 Terminal Definition and Connection....67
3.8.4 Electrical Schematic Diagram....72
3.8.5 Definition of Indicators....73
3.8.6 Upgrade the Project in Controller....74

3.9.1 Technical Specifications....75
3.9.2 Module Structure Diagram....77
3.9.3 Terminal Definition and Connection....78
3.9.4 Electrical Schematic Diagram....80
3.9.5 Definition of Indicators....80
3.9.6 Upgrade the Project in Controller....80

4.1.1 Technical Specifications....81
4.1.2 Terminal Definition and Connection....81
4.1.3 Principle Diagram....82
4.1.4 Expansion Connection....82

4.2.1 Technical Specifications....83
4.2.2 Terminal Definition and Connection....84
4.2.3 Principle Diagram....85
4.2.4 Expansion Connection....85

4.3.1 Technical Specifications....85
4.3.2 Indicator Definition....86
4.3.3 Terminal Definition and Wiring....86
4.3.4 Electrical Schematic Diagram....87
4.3.5 Expansion Connection....87

4.4.1 Technical Specifications....88
4.4.2 Indicator Definition....89
4.4.3 Terminal Definition and Wiring....89
4.4.4 Electrical Schematic Diagram....90
4.4.5 Expansion Connection....90

4.5.1 Technical Specifications....91

Beijing HollySys Intelligent Technologies Co., Ltd. All Rights Reserved

4.5.2 Signal Type and Scale Range of Input Channel.....92
4.5.3

Beijing HollySys Intelligent Technologies Co., Ltd. All Rights Reserved

6.4.1 Technical Specifications 108
6.4.2 Definition of Indicators 108
6.4.3 Terminal Definition and Connection 108

7.1.1 Technical Specifications 111
7.1.2 Indicator Definition 112
7.1.3 Terminal Definition and Wiring 112
7.1.4 Electrical Schematic Diagram 113
7.1.5 Expansion Connection 113
7.1.6 Fault Diagnose 114

7.2.1 Technical Specifications 117
7.2.2 Indicator Definition 118
7.2.3 Terminal Definition and Wiring 118
7.2.4 Electrical Schematic Diagram 119
7.2.5 Expansion Connection 119
7.2.6 Fault Diagnose 120

10.1.4 Signal Type and Scale Range of Output Channels 151
10.1.5 Terminal Definition and Connection 151
10.1.6 Electrical Schematic Diagram 154
10.1.7 Software Configuration 154

11.1.1 Technical Parameters 155
11.1.2 Interface Description 156
11.1.3 Software Configuration 157
11.1.4 Use Instruction 159

11.2.1 Technical Specifications 160
11.2.2 Definition of Indicators 161
11.2.3 Relationship between Communication Rate and Cable Length 161
11.2.4 Terminal Definition and Connection 161
11.2.5 The Corresponding Relationship between DIP Switch State and Station Address ... 162
11.2.6 Pin Definition of 9-pin D Type Interface 163
11.2.7 Software Configuration 163

11.3.1 Technical Specifications 164
11.3.2 Definition of Indicators 165
11.3.3 Terminal Definition and Connection 166
11.3.4 Software Configuration 166
11.3.5 Modbus TCP Functional Description 168

11.4.1 Technical Specifications 169
11.4.2 Definition of Indicators 170
11.4.3 Terminal Definition and Connection 170
11.4.4 Software Configuration 171

11.5.1 Technical Specifications 172
11.5.2 Interface Description 173
11.5.3 Terminal Wiring 175
11.5.4 Use Instruction 176
11.5.5 Power Calculation 177

Beijing HollySys Intelligent Technologies Co., Ltd. All Rights Reserved

12.1.1 Write Memory Card Function 179
12.1.2 The Function of Controller to Upload Project From Memory Card 179
12.1.3 LEA5820 Definition of indicators.....180

12.2.1 Technical Specifications.....180

12.3.1 Technical Specifications.....182

12.4.1 Technical Specifications.....184

12.5.1 Technical Specifications.....186

13.1.1 Installation Environment.....187
13.1.2 Installation and Removal of CPU module 188
13.1.3 Installation and Removal of Expansion Modules.....190
13.1.4 Installation and Removal of Expansion Boards 193
13.1.5 Removal and Reinstallation of LE Terminal Block Connectors 195

13.2.1 Guidelines for Inductive Loads.....196
13.2.2 Guidelines for Lamp Loads 197
13.2.3 Grounding.....198

Beijing HollySys Intelligent Technologies Co., Ltd. All Rights Reserved

- Warning icon, indicating that the operation may lead to the potential threats of failure or damage to software and hardware devices.

-

HollySys Programmable Logic Controller PLC Instruction Manual

AutoThink V3.1 User Manual_Project Configuration

LE Series Programmable Logic Controller Hardware Manual

Profibus –DP	Standard Bus Protocol, used for high-speed data transfer on the field layer.
MODBUS	Modbus is a general bus protocol for communication among controllers or among controllers and other devices.

Beijing HollySys Intelligent Technologies Co., Ltd. All Rights Reserved

PLC	Programmable Logical Controller
I/O	Input /Output
DC	Direct Current
AC	Alternating Current
GPRS	General Packet Radio Service
TCP	Transmission Control Protocol
Profibus	Process Field Bus
AI	Analog Input
AO	Analog Output
DI	Digital Input
DO	Digital Output

Beijing HollySys Intelligent Technologies Co., Ltd. All Rights Reserved

LE Series PLC includes various kinds of CPU modules and expansion modules, and works with powerful Auto Think Programming Software which has abundant instruction sets and functions library. LE PLC is appreciated by its stable performance, reliable quality, convenient maintenance and competitive price and has been applied widely in various industries of automation field.

LE series programmable logic controller (PLC) is a new generation high-performance micro PLC offered by HollySys. This product fully takes the seamless integration of the system, controller, HMI and software and the requirement for efficient coordination into consideration, and further improve product's portfolio.

- Main features
  - Compact design
  - Simple and reliable installation
  - Various module types
  - Powerful analog processing
  - Abundant instruction sets
  - Special power-loss protection
  - Off-line simulation
  - IEC Standard programming languages
- Application scenarios
  - Punching machinery, printing machinery, textile machinery
  - Construction machinery, packaging machinery, plastics machinery
  - Motion control
  - Environmental control equipment
  - Central air conditioner
  - Elevator control

Beijing HollySys Intelligent Technologies Co., Ltd. All Rights Reserved

- Rubber & plastics
- Various types of production lines

■ Product Function

- Integrated 24V power output: It can provide power for external sensors or transmitters, etc.
- AC / DC module: support different power supply and control voltage
- Interrupt input: Allow quickly responds to the process signal.
- Single phase / A/B phase high-speed counters: Support counting up and counting down calculation
- Pulse output: Used to control the servo motors or stepper motors to fulfill positioning tasks
- Real Time Clock: Record the machine running time and display the PLC system time
- Interpolation function: Can achieve linear or circular interpolation function

The LE series PLC has powerful function making it a perfect solution for controlling various applications that either can operate at independent operation or can be connected to network to fulfill complicated control.

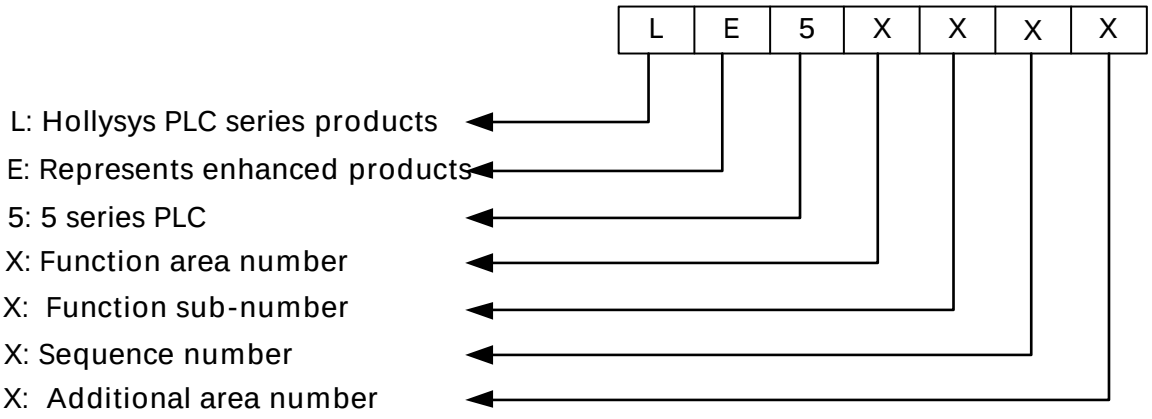

Figure 1 Naming Rules

For example: LE5223: Digital output module

Beijing HollySys Intelligent Technologies Co., Ltd. All Rights Reserved

Table 2 PLC Naming Rules for LE Series

1 CPU module	00-99 serial number Even: 24VDC power supply, DO is the transistor output Odd: 220VAC power supply, DO is the relay output		E indicates analog input and output L indicates economic type
2 Digital module	1 Input module	0---9 serial number Even: DO is the transistor output Odd: DO is the relay output	
	2 Output module		
3 Analog module	1 Input module	0---9 serial number	
	2 Output module		
	3. Input and output mixed module		
4 Communication module	00-99 serial number		
6 Expansion board	1 Input module	0---9 serial number	
	2 Output module		
	3 Input and output mixed module		
7 Special module	0-99 serial number		

Beijing HollySys Intelligent Technologies Co., Ltd. All Rights Reserved

Figure 2 LE5104 Module Appearance

Beijing HollySys Intelligent Technologies Co., Ltd. All Rights Reserved

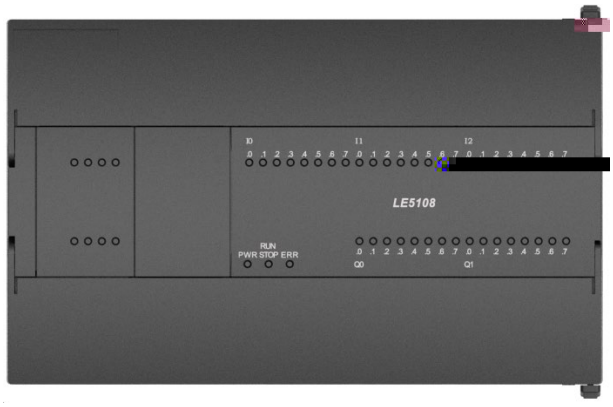

Figure 6 LE5108 Module Appearance

- LE5109L
  - 220VAC power supply, 24VDC digital input, relay output
  - Integrated 24DI + 16DO total of 40 digital I / O
  - Controllers for complicated automation control requirements with large amount of I/O application

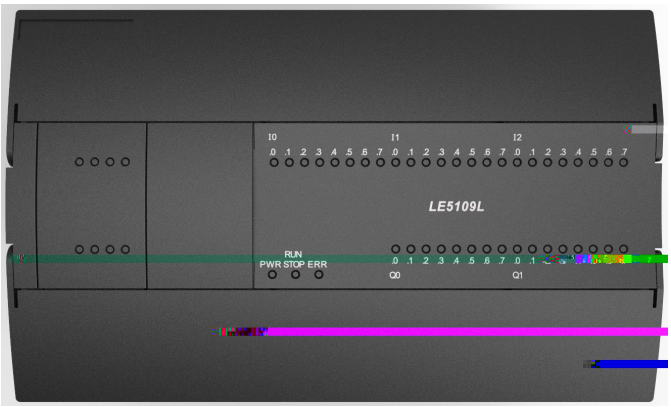

Figure 7 LE5109L Module Appearance

- LE5118
  - 24VDC power supply, 24VDC digital input, transistor output
  - Integrated 24DI + 16DO total of 40 digital I / O
  - Controllers for complicated automation control requirements with large amount of I/O application

Beijing HollySys Intelligent Technologies Co., Ltd. All Rights Reserved

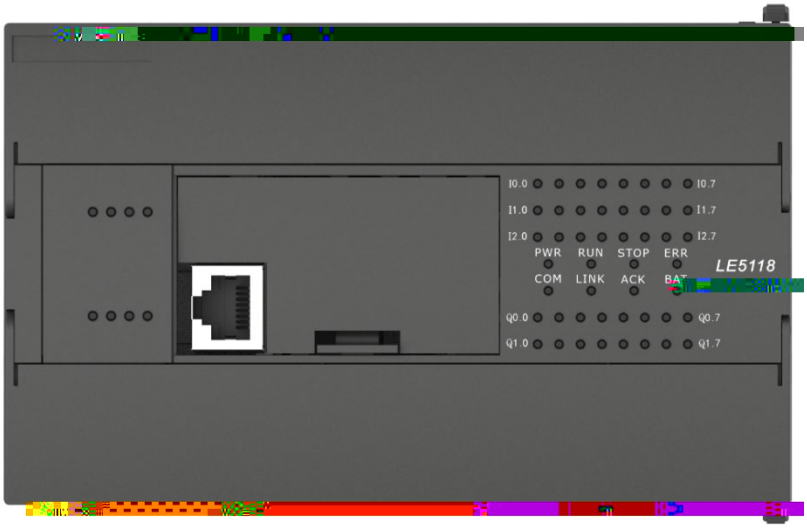

Figure 8 LE5118 Module Appearance

- LE5119
  - 220VAC power supply, 24VDC digital input, relay output
  - Integrated 24DI + 16DO total of 40 digital I / O
  - Controllers for complicated automation control requirements with large amount of I/O application

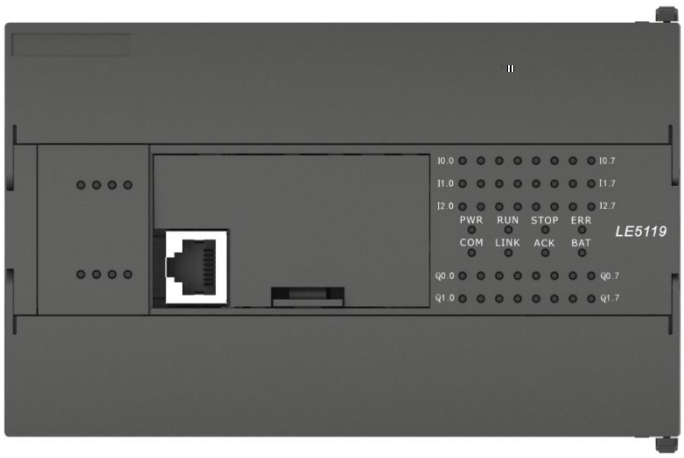

Figure 9 LE5119 Module Appearance

- The ability of CPU module to expand modules must meet the CPU module power consumption, see Chapter 2.4 Power Consumption Calculation for details.

Beijing HollySys Intelligent Technologies Co., Ltd. All Rights Reserved

Apart from the integrated I/O channels, high-speed counting, high-speed output and other special functions in CPU module, in order to achieve control requirements under certain conditions, HollySys also carry a series of expansion modules that further extend the capability of LE PLC from both I/O channels and communication functions aspects. Digital module includes digital input modules and digital output modules.

Analog module includes analog input modules, analog output modules, analog input / output modules, thermocouple input modules, RTD input modules.

LE series PLC also provides a communication expansion module which provides the extremely favorable condition for the improving of function extensions. Communication module includes Profibus-DP slave communication module, Ethernet communication module, GPRS communication module and serial port communication extension module.

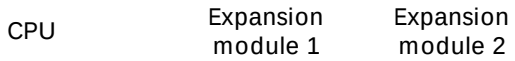

Figure 10 Expansion Module Schematic Diagram

I/O configuration of LE series PLC needs to consider the type of CPU module, the type and amount of expansion module, the size of the I/O data memory, current consumption and other factors.

Table 3 The Maximum I/O Configuration of CPU

LE5107E	On-board IO	20(12DI+8DO)	4(2AI+2AO)
	The maximum expandable IO	128	22

Beijing HollySys Intelligent Technologies Co., Ltd. All Rights Reserved

	The maximum IO	148	26
LE5107L	On-board IO	24(14DI+8DO)	0
	The maximum expandable IO	No less than 80 DI or 42 DO	No less than 24 AI or 12 AO
LE5108	On-board IO	40(24DI+16DO)	0
	The maximum expandable IO	640	160
	The maximum IO	684	162
LE5118	On-board IO	40(24DI+16DO)	0
	The maximum expandable IO	640	160
LE5119	On-board IO	40(24DI+16DO)	0
	The maximum expandable IO	684	162

The power supply for expansion modules and terminals are integrated inside the CPU module of LE series PLC, offering power for the CPU module as well as expansion module. All LE series CPU modules provide external 24VDC output which can supply power to sensors or actuators in field.

Table 4 CPU Module Power Supply Specifications

	24VDC	220VAC	24VDC	5VDC	24VDC	5VDC
LE5104	800mA	—	250mA	600mA	350mA	—
[redacted]	—					

Table 5 Expansion Module Power Consumption Specifications

	24 VDC	5 VDC
LE5210	0mA	50mA
LE5211	0mA	65mA
LE5212	0mA	105mA
LE5220	0mA	90mA
LE5221	60mA	50mA
LE5223	120mA	135mA
LE5224	0mA	265mA
LE5310	15mA	95mA
LE5311	0mA	75mA
LE5340	0mA	135mA
LE5341	0mA	80mA
LE5341T	0mA	80mA
LE5342	0mA	130mA
LE5320	0mA	90mA
LE5321	0mA	45mA
LE5330	0mA	35mA
LE5401	0mA	145mA
LE5403	0mA	210mA
LE5404	0mA	30mA

Table 6 Gateway Communication Module Power Specification

	24 VDC	5 VDC
LE5405	2100mA	3000mA

In LE PLC system configuration, the number of the expansion modules connected will affect the total demand of the system power. Increasing the number of expansion modules could overload the rated outputting power of CPU module. If this is the scenario, then the number of the expansion modules has to be reduced until it satisfies the rated outputting power of CPU module. Therefore, when choosing CPU module, the number of expansion modules and power consumption of the peripheral devices shall be taken into consideration.

- Calculation examples of power requirement

Beijing HollySys Intelligent Technologies Co., Ltd. All Rights Reserved

The following table provides a calculation example of power demands. The PLC system consists of a CPU module LE5108 and three expansion modules - LE5211, LE5233 and LE5310. The calculation demonstrates that both of the consumption of 24VDC and 5VDC by expansion modules is less than the power providing of LE5108 to its expansion bus. Therefore, CPU module - LE5108 is able to supplies enough power to its expansion modules.

Beijing HollySys Intelligent Technologies Co., Ltd. All Rights Reserved

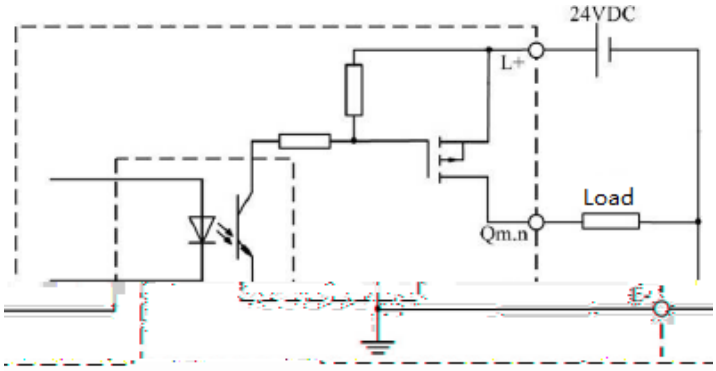

Figure 12 Ordinary Output Channels of Transistor Digital Output

- Electrical schematic diagram of the high-speed transistor digital output channels

Figure 13 High-speed Transistor Digital Output Channels

- Electrical schematic diagram of relay digital output channels

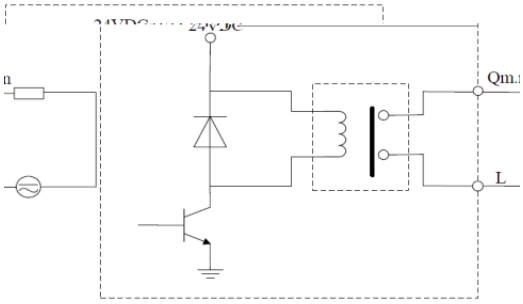

Figure 14 Relay Digital Output Channels

- Electrical schematic diagram of analog input channels (differential)

Beijing HollySys Intelligent Technologies Co., Ltd. All Rights Reserved

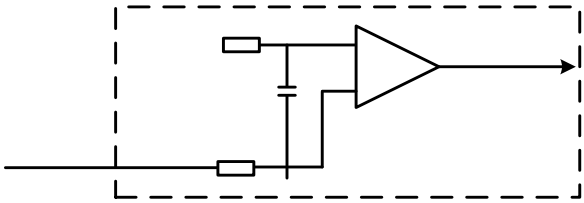

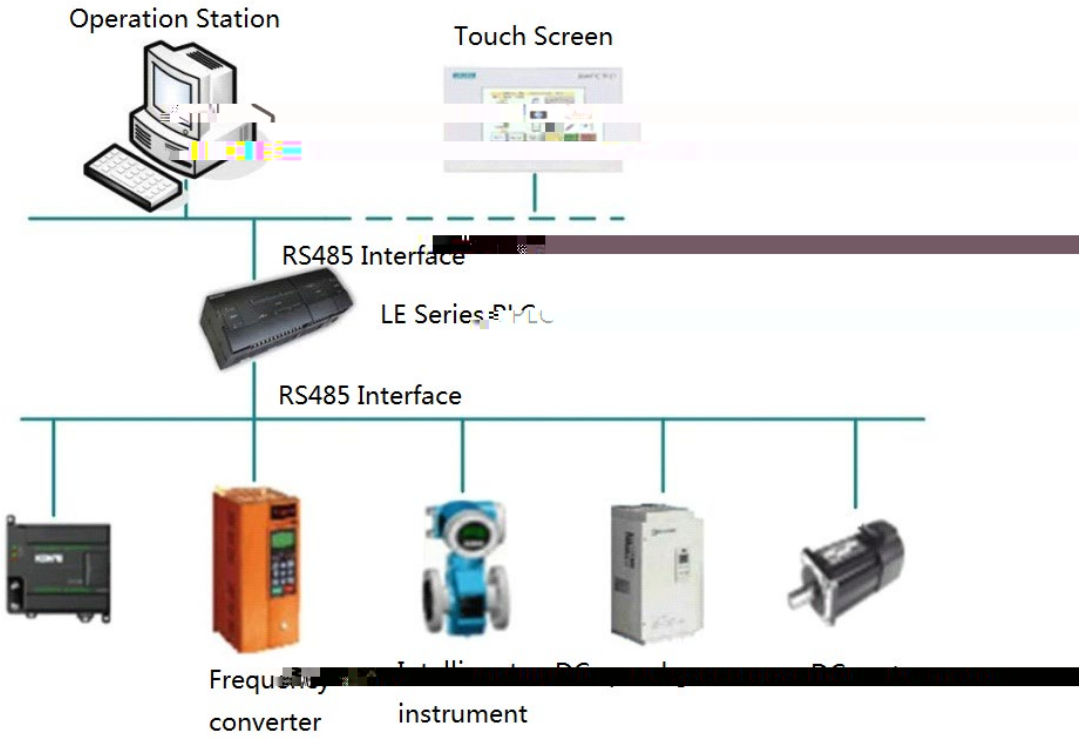

Figure 18 RS485 Communication Mode

Beijing HollySys Intelligent Technologies Co., Ltd. All Rights Reserved

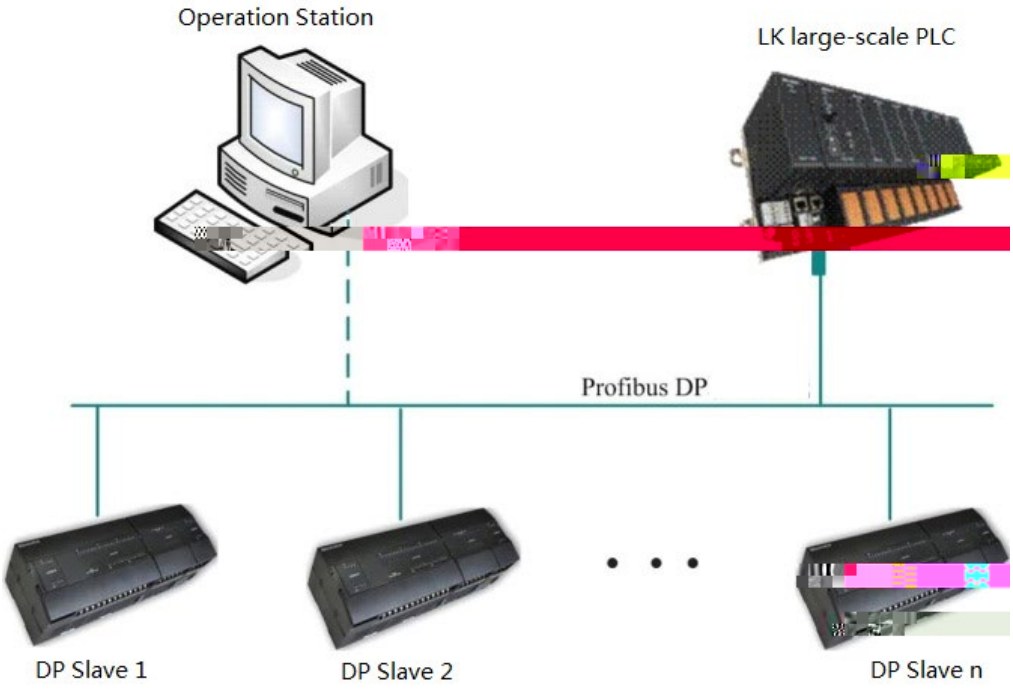

Figure 19 Profibus DP Mode

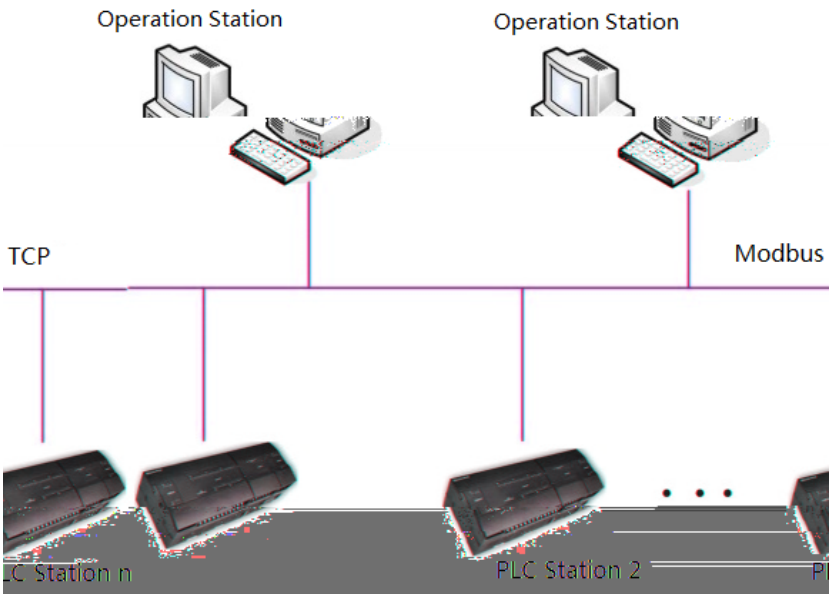

Figure 20 Ethernet Communication Mode

Beijing HollySys Intelligent Technologies Co., Ltd. All Rights Reserved

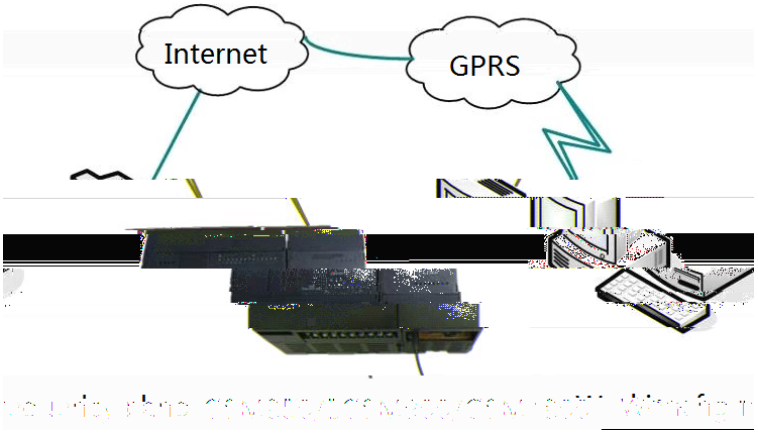

Figure 21 GPRS Communication Mode

■ Electromagnetic Compatibility

Electromagnetic Compatibility (EMC) is the ability of an electrical device to operate as intended in an electromagnetic environment and to operate without emitting levels of electromagnetic interference (EMI) that may disturb other electrical devices in the vicinity.

Table 8 Electromagnetic Compatibility Specification

Item	Port	Specification
IEC 61000-4-2 Electrostatic Discharge	Chassis	Contact discharge 6kV, Air discharge 8kV
IEC 61000-4-3 Radiated, radio-frequency, electromagnetic field immunity test	Chassis	80MHz~1GHz,10V/m 1GHz~2.7 GHz,3V/m
IEC 61000-4-8 Frequency Magnetic Field Immunity	Chassis	30A/m
IEC 61000-4-4 Electrical Fast Transient Burst	DC systems	No requirements
	AC systems	2kV
	Digital I/O	1kV
	Analog signal and 485 communication port	1kV
IEC 61000-4-5 Surge Immunity	DC systems	No requirements
	AC systems	Common mode 2 kV, differential mode 1kV

Beijing HollySys Intelligent Technologies Co., Ltd. All Rights Reserved

	Signal port	1kV
IEC 61000-4-6 Conducted disturbances	Power port, signal port	0.15~80MHz, 10V

- Insulation Withstand Voltage Specifications

Table 9 Insulation Withstand Voltage Specifications

220V input to earth	3000Vrms, 1min, leakage current <10mA
220V input to 24V/5V output	3000Vrms, 1min, leakage current <10mA
System isolated from the external IO	1000Vrms, 1min, leakage current <10mA

- Environmental Reliability Specifications

Table 10 Environmental Reliability Specifications

Working Temperature	-40 70 , 5~95% Relative humidity, non-condensing
IEC 60068-2-14, Test Nb, temperature shock	5 55°C, 3°C/min
IEC 60068-2-27, mechanical shock	15g, duration for 11ms, every axis six times

Beijing HollySys Intelligent Technologies Co., Ltd. All Rights Reserved

Table 11 Rated Voltage

24VDC	20.4 28.8VDC
220VAC	85 264VAC(50/60Hz)

- Transportation

The package of this product satisfies the requirement of road and railway transportation. However, in the process of transportation, the environment conditions should meet the requirement that is regulated by the product technology.

- Storage

The packed products are not suitable for outdoor storage and the relative humidity has to be maintained from 5% to 95% without condensation. The storage of LE PLC should keep away from chemical products that contain harmful gas, inflammable, explosive and mordant. Moreover, these products should be prevented from intense mechanical vibration, impact and the action of high-intensity magnetic field.

The transported barometric pressure should be within the altitude of 0 to 3,000 meters. And the permissible temperature range for storage is from -40 to 70°C.

- Notice for Installation

  - Please install the PLC in accordance with the specifications in the manual, the installation shall keep away from below environment:
    - Dust, lampblack, electric conductivity dust, corrosive gas and flammable site.
    - The site exposed to high temperature, moisture condensation, wind and rain.
    - The site with vibration and impact.
    - The electricity shocking and fire will shorten the product lifespan and causing products damage.
  - During installation, the metal filing or electric wire should be avoided from probe into the ventilate grille of PLC.
  - During installation, the power supply to PLC should remain off state.
  - Installation and wiring should be fastened to avoid the loss connection.
  - Before PLC powering on, please ensure the terminal covers are attached and and a94.3 (at)6.3 (e 5ar)4.4

Beijing HollySys Intelligent Technologies Co., Ltd. All Rights Reserved

Figure 23 Connecting Programming Cable

The programming cable for LE series PLC is a non-isolated industrial converter. It is an USB to 485 DIN type interface. It can realize the application program downloading and real-time communicating between PLC and its connected PC through AutoThink programming software.

LE5118/LE5119 controller can communicate with AutoThink software through Ethernet port or

LE54w(k)-1Le w I0 Tc 25(w598147.1 (l)-4.pr)3 an be1.5 (e)]TugT

CPU Module is the control center of the whole PLC system, engaging functions of control, detection, diagnosis and communication that the system needed.

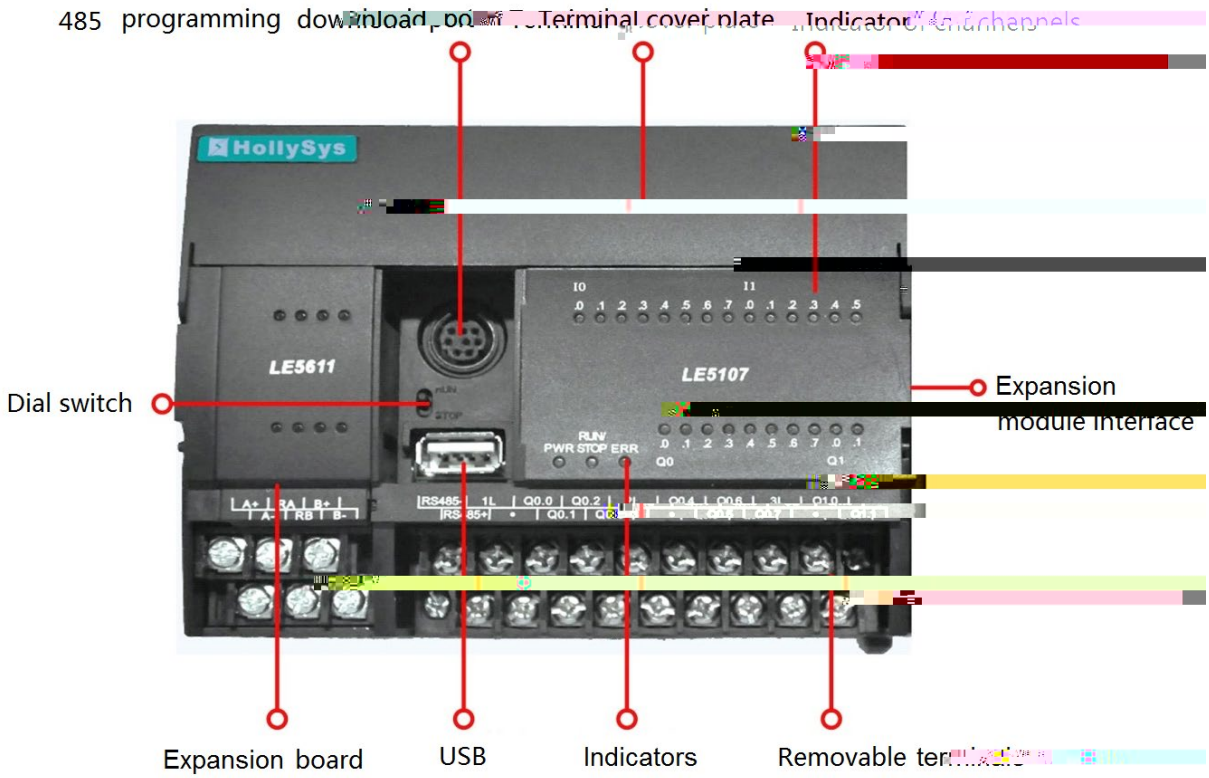

Figure 25 CPU Module Structure

- 485 programming download port: It provides channel for downloading user program, supports visiting to external devices and multi-PLC interconnection (applies to multi-PLC interconnection of 14 points CPU).

Beijing HollySys Intelligent Technologies Co., Ltd. All Rights Reserved

- Dial switch: You can choose the run/stop mode of CPU module.
- Expansion module interface: It is used for the communication between CPU module and expansion module.
- USB: Supports uploading user program from USB (applies to 24 points and 40 points CPU module).
- Expansion board: Supports expansion of function board (applies to 24 points and 40 points CPU module). In order to protect the port, protection cover is installed in the module. Coat the cover after wiring to prevent electric shock.

LE series PLC provides various kinds of CPU to meet requirements for different applications. CPU ontology integration has a certain number of I/O points, among which DI is transistor type input which is able to connect source type or sink type input signals; DO type is transistor or relay. According to the specifications of supply power, CPU can be classified as two types: power supplied by 24 VDC and 220VAC. Table 13 shows the major technical specification of various CPU modules.

Table 13 Major Technical Specification of CPU Modules (1)

Supply voltage	24VDC	220VAC	24VDC	24VDC	220VAC	220VAC		
DI	8×24VDC		24×24VDC			12×24VDC	14×24VDC	24×24VDC
DO	6×transistor	6×relay	16×transistor	16×transistor	16×relay	8×relay	10×relay	16×relay
AI	-					2×voltage or current	-	
AO	-					2×voltage or current	-	
Number of expansion module (max), see Note	10	10	20	20	20	4	4	7
Increment download function	Not supported		Supported in LE5108-A08 and above version	Supported	Supported	Supported in LE5107E-C04 and above version	Supported in LE5107L-D02 and above version	Supported in LE5109L-D02 and above version

Beijing HollySys Intelligent Technologies Co., Ltd. All Rights Reserved

Program download function	Binary code download mode							
Program upload function	Supported					Not supported		
Memory card function	Not supported		Supported	Not supported	Not supported	Supported		
TF card function	Not supported		Not supported	Supported	Supported	Not supported	Not supported	

Beijing HollySys Intelligent Technologies Co., Ltd. All Rights Reserved

Both programming software and CPU module provide the setting of “Run” and “Stop” status, therefore the software and hardware are constrained each other.

Table 14 RUN/STOP Switch Setting Instructions

RUN (switch to upper position)	RUN	RUN: automatically changed into STOP if users download program in this state.
	STOP	STOP
Stop (switch to lower position)	RUN/STOP	STOP (user program stops, unable to run)
STOP RUN Switch	RUN/STOP	RUN, you can controller run or stop of the controller by programming software
RUN STOP Switch	RUN/STOP	STOP, user's program stops, unable to run by programming software

Table 15 Definition of Indicator

Power supply PWR	Green	ON	Power supply works in normal mode.	
		OFF	Power is abnormal or no power or output 24V overloading	
Channel status indicator Ix.y,Qm.n	Green	ON	The channel is in ON	
		OFF	The channel is in OFF	
Operation status indicator RUN/STOP	Green/ Yellow	ON green	PLC is in RUN mode and user program is running	
		Flashing green	User program memory is null or project is invalid	Only LE5109L supported
		ON yellow	PLC is in STOP mode and user program is not running	

Beijing HollySys Intelligent Technologies Co., Ltd. All Rights Reserved

		Flashing yellow(1Hz)		PLC firmware is upgrading	Only LE5107L/LE5107E/LE5108/ LE5109L supported
		Flashing alternately	1Hz	Waiting for transferring user program from memory card	Only the LE5107L/LE5107E/LE5108/ LE5109L

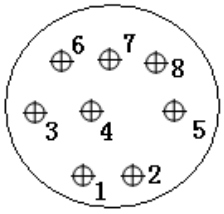

Figure 27 Pins of 485 Downloading Port

Table 16 Definition of Pins

1	NC	2	NC
3	NC	4	NC
5	RS485+	6	RS485-
7	GND	8	NC
9	PGND(Shell)		
Note	5, 6 use twisted pair		

LE5104 is a CPU module of LE Series micro PLC which can complete control, detection, diagnosis, RS485 communication needed for system. Functions specifically achieved as follows: RUN/STOP switch selects running and stopping mode of module. RTC records operation time. RS485 interface provides channel to download application program and supports access to peripheral device and multi-PLC interconnection, equipped with 8 DI and 6 DO and is a general-purpose CPU module.

Table 17 Technical Specifications

On-board I/O	8 DI / 6 DO	Input	Rated voltage	24VDC
I/O expansion module (max.)	10 (total module power consumption CPU rating)		Permissible range	20.4~28.8VDC

Beijing HollySys Intelligent Technologies Co., Ltd. All Rights Reserved

Programming language	LD/ST/CFC/SFC		Current consumption (max.)	800mA@24VDC
Program memory	64K bytes	External output voltage		24VDC
Data memory	18K bytes	External output current (max.)	+24VDC (supply for expansion bus)	250mA
Power-loss retentive memory	2K bytes		+24VDC (supply for peripheral device)	350mA
HSC	2 HSC at 20 KHz for single phase Ix0.0, Ix0.1		+5VDC (supply for expansion bus)	600mA
	1 HSC at 10 KHz for A/B phase Ix0.0, Ix0.1	Hold up time (loss of power)		10ms
Pulse outputs (max.)	2, 20KHz Qx0.0, Qx0.1	Output Specifications		
Pulse catch	2 Ix0.0, Ix0.1	Number of outputs	6	
Fast external interruption	2 Ix0.0, Ix0.1	Output type	Transistor	
Basic instruction processing time	0.1 s	Rated voltage	24VDC	
Input Specifications		Permissible range	20.4 to 28.8VDC	
Number of inputs	8	Output current	Max. 500mA for PTO channel; max. 1A for ordinary channel	
Input type	Sink/source	Current per common	1A max. for PTO channel; 4A max. for ordinary channel	
Rated voltage	24VDC	Residual voltage	<0.5V (output logic 1, at 1A current)	
Permissible range	0~30VDC	On state resistance	typical), max.)	
Logic 1 signal	15~30VDC, permissible min. current 3mA	Isolation mode	Optocoupler isolation (field side to system)	
Logic 0 signal	0~5VDC, permissible max. current 1mA	Isolation groups	2	
Filtering parameter	No filtering, 5ms, 10ms, 20ms, 50ms, and 100ms	Isolation withstand voltage	500V AC for 1minute, leakage current <5mA	
Isolation mode	Optocoupler isolation (field side to system)	Physical Specifications		
Isolation groups	1	Dimensions W x H x	78 x 97 x 90	

Beijing HollySys Intelligent Technologies Co., Ltd. All Rights Reserved

		D (mm)	
Isolation withstand voltage	500V AC for 1minute, leakage current <5mA	Weight	315g
Communication Specifications		Operating temperature	-40 70
Communication interface	1 RS485	Storage temperature	-40 70
Interface type	PS/2	Relative humidity of operating environment	5%~95% (non-condensing)
Baud rates (bps)	1,200, 2,400, 4,800, 9,600, 19,200, 38,400, 57,600, 115,200	Relative humidity of storage environment	5%~95% (non-condensing)
Communication protocol	Proprietary protocol, Modbus master-slave, free port protocol, multi-PLC interconnection		

LE5104 is connected with an external 24VDC power and has two pluggable terminals (8x2 and 5x2), the upper terminal offers digital input channel (DI), the lower terminals offers digital output channel (DO), and connection is easy and convenient and is secured with screw, which is a typical field connection case.

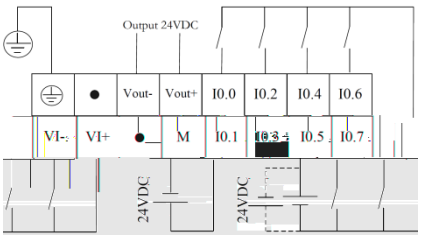

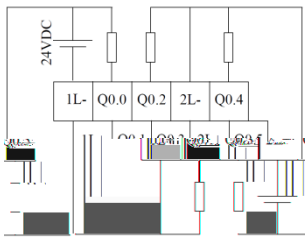

Figure 28 Upper Terminal Definition ***Lower Terminal Definition***

- LE5104 Terminal Definition and Connection Instructions
  - High-speed channel output mode for the open set; ordinary channel output mode for the high-side drive, wiring as shown in .
  - M terminal of digital input channel (DI) is common terminal for peripheral DI, users can choose to connect M to positive terminal or negative terminal of 24VDC power to fit sink/source type of DI.

Beijing HollySys Intelligent Technologies Co., Ltd. All Rights Reserved

- 1L+, 2L+ and 1L-, 2L- of output channel (DO) respectively are connected to positive terminal and negative terminal of 24VDC load driving power source.
- VI+ and VI- of upper terminal are respectively connected to positive and negative terminals connecting 24VDC power supply to CPU modules.
- Vout+ and Vout- terminals of upper terminal are respectively connected to positive and negative terminal 24VDC connecting power supply to external devices.
- ● means the channel cannot be connected or connection is not available. ⏚ means grounding.
- The following wiring diagrams include two schematic diagrams of connection of high-speed output terminal and motor, the external resistance in the schematic diagrams is for example only. In actual applications, users must calculate external resistance according to their selected permissible current on input side of driver and internal resistance.

wiring diagrams include two schematic diagrams of connection of high-speed output terminal and motor, the external resistance in the schematic diagrams is for example only. In actual applications, users must calculate external resistance according to their selected permissible current on input side of driver and internal resistance.

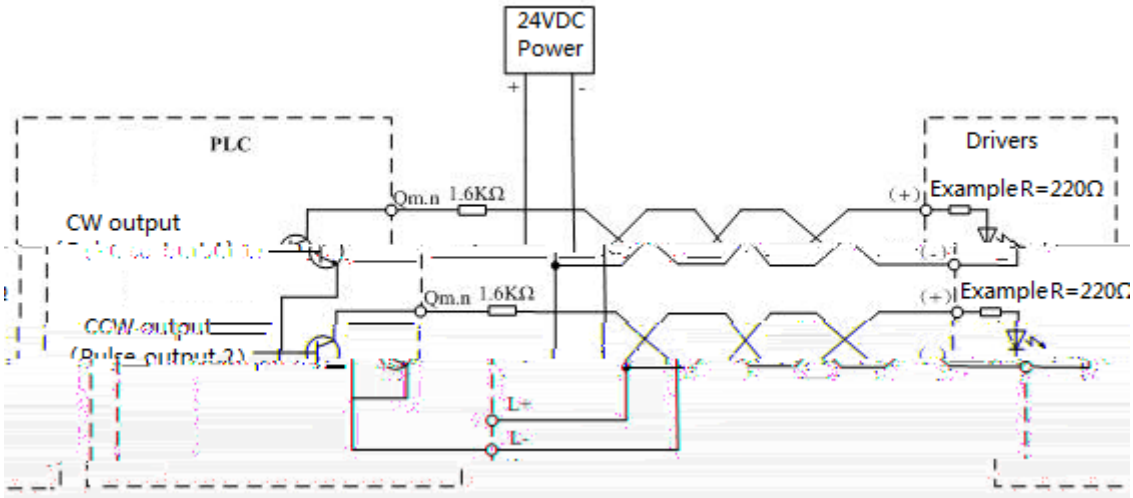

(a)

Beijing HollySys Intelligent Technologies Co., Ltd. All Rights Reserved

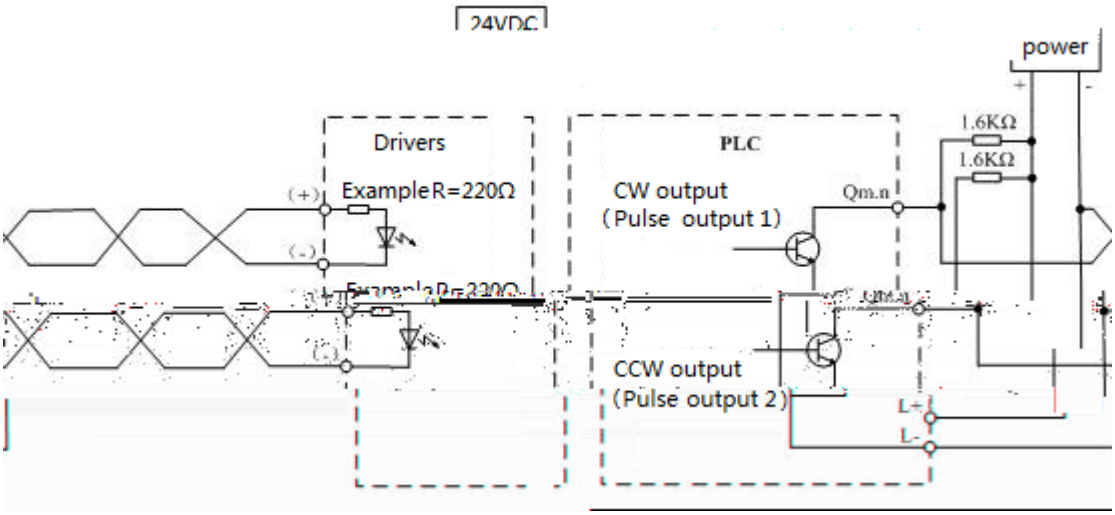

(b)

Figure 29 CW/CCW Mode Wiring Diagram

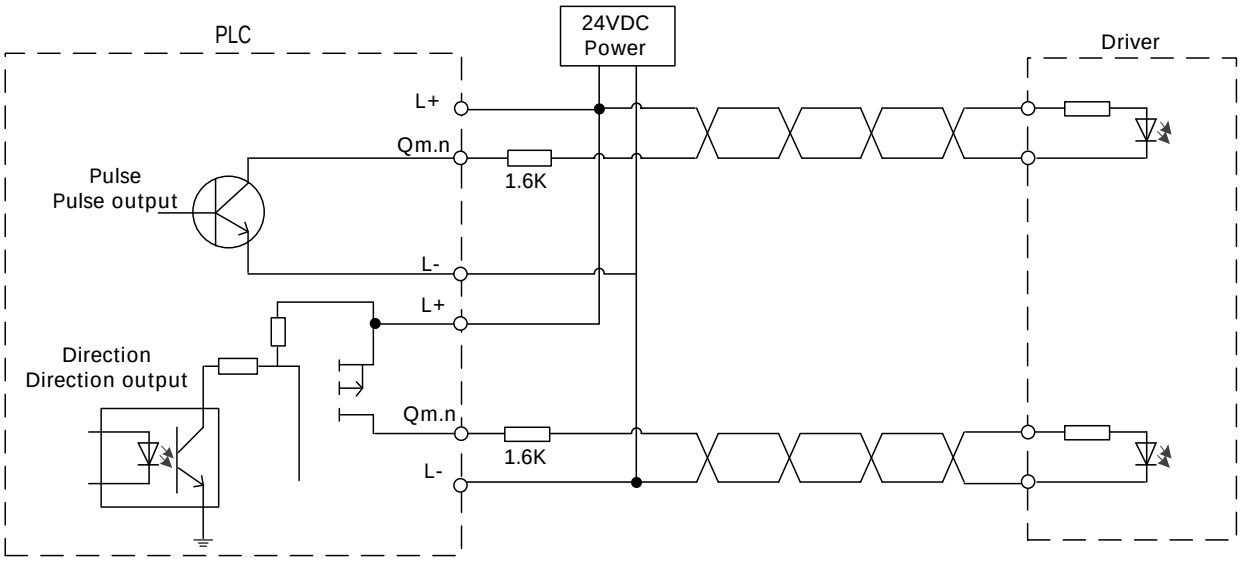

Figure 30 Pulse + Direction Mode Wiring Diagram

Description:

CW / CCW mode:

1: Output axis 1, pulse output (CW) Q0.0, pulse output (CCW) Q0.1

Pulse + direction mode:

Beijing HollySys Intelligent Technologies Co., Ltd. All Rights Reserved

1: Output axis 1, pulse output Q0.0, pulse direction Q0.4

2: Output axis 2, pulse output Q0.1, pulse direction Q0.5

Table 18 Terminal Identification

	Grounding	VI-	Input power supply 24VDC negative
	No connection	VI+	Input power supply 24VDC positive
Vout-	Output 24VDC negative		

Beijing HollySys Intelligent Technologies Co., Ltd. All Rights Reserved

l impedance is required to be greater than 100
ernal.

ch can complete control, detection, diagnosis
ions specifically achieved as follows:
e of module. RTC records operation time.
ation program and supports access to
ipped with 8 DI and 6 DO and is a general-

Specifications

	Rated voltage	100~240VAC
	Permissible range	85~264VAC 50/60Hz
	Current consumption (max.)	400mA
tput voltage		24VDC
	+24VDC (supply for expansion bus)	200mA
output ax.)		

Input Specifications		Rated voltage	24VDC or 24 230VAC
Number of inputs	8	Permissible range	5 30VDC or 5 250VAC

Beijing HollySys Intelligent Technologies Co., Ltd. All Rights Reserved

Figure 32 Upper Terminals Definition ***Lower Terminals Definition***

- LE5105 terminal definition and wiring description
  - M terminal of input channel (DI) is as common terminal for peripheral DI, users can chose to connect M to positive terminal or negative terminal of 24VDC power supply to accommodate sink/source type of DI.
  - 1L and 2L in output channel(DO) are as two groups Load power supply terminals, it can be a 24VDC power supply, also can be a 24 ~ 230VAC power supply.
  - L and N of upper terminal are respectively connected to firing line and null line of 220VAC power supply on CPU module;
  - Vout+ and Vout- respectively are positive and negative terminal of the 24 VDC power output form CPU module.
  - “ ” means the channel cannot be connected or connection is not available. “ ” means grounding.

Table 20

Beijing HollySys Intelligent Technologies Co., Ltd. All Rights Reserved

	/AC
	C

49 upATc 0 Tw ( )TjE3.1

External output current (max.)

Rated voltage		24VDC	Rated voltage		24VDC or 24 ~ 230VAC
Permissible range		0~30VDC	Permissible range		5 ~ 30VDC or 5 ~ 250VAC
Logic 1 signal		15~30VDC, permissible min. current 4mA	Output current		2A (resistance load)
Logic 0 signal		0~5VDC, permissible max. current 1mA	Current per common		<8A
Filtering parameter		No filtering, 5ms, 10ms, 20ms, 50ms, and 100ms	On state resistance		
			Switching frequency		1Hz
Isolation mode		Optocoupler isolation (field side to system)	Mechanical life of relay		No load: up to 10,000,000 open/close cycles
Isolation groups		1			Rated resistance 2A load: up to 100,000 open/close cycles
Isolation withstand voltage		500VAC,for 1minute, leakage current <5mA	Isolation mode		Relay isolation (field side to system)
Analog Input Specifications			Isolation groups		2
Number of inputs		2	Isolation withstand voltage		1500VAC for 1 minute, leaking current <5mA
Input type		Single-ended	Analog Output Specifications		
Input range	voltage	0~10V	Number of outputs		2
	current	0~20mA/4~20mA	Output range	voltage	0~10V
[redacted] code value		0~65535		current	0~20mA/4~20mA

Beijing HollySys Intelligent Technologies Co., Ltd. All Rights Reserved

Isolation mode (field side to system)	No	Isolation mode (field side to system)	None
Physical Specifications			
Dimensions W x H x D(mm)	117 x 97 x 90	Weight	575g
Operating temperature	-40 70	Storage temperature	-40 70
Relative humidity of operating environment	5%~95% (non-condensing)	Relative humidity of storage environment	5%~95% (non-condensing)

LE5107E is connected with an external 220VAC power and has two pluggable terminals (11x2 and 9x2), the upper terminal offers digital input channel (DI, AI), the lower terminals offers digital output channel (DO, AO), and connection is easy and convenient and is secured with screw, which is a typical field connection case.

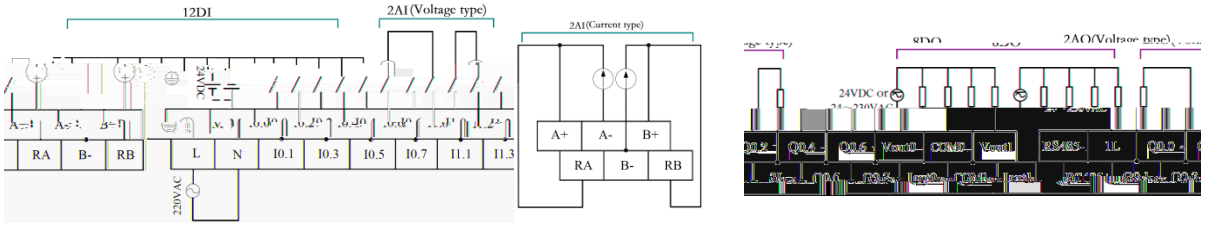

Figure 34 Upper Terminal Definition and Wring Diagram Lower Terminal Definition and Wring Diagram

Table 22 Terminal Identification

⏚	Grounding	L	Fire wire	RS485-	RS485 communication negative	RS485+	RS-485 communication positive
M	Common of Input	N	Null wire	1L	Output common (Q0.0~Q0.3)	Q0.1	Ordinary output

Beijing HollySys Intelligent Technologies Co., Ltd. All Rights Reserved

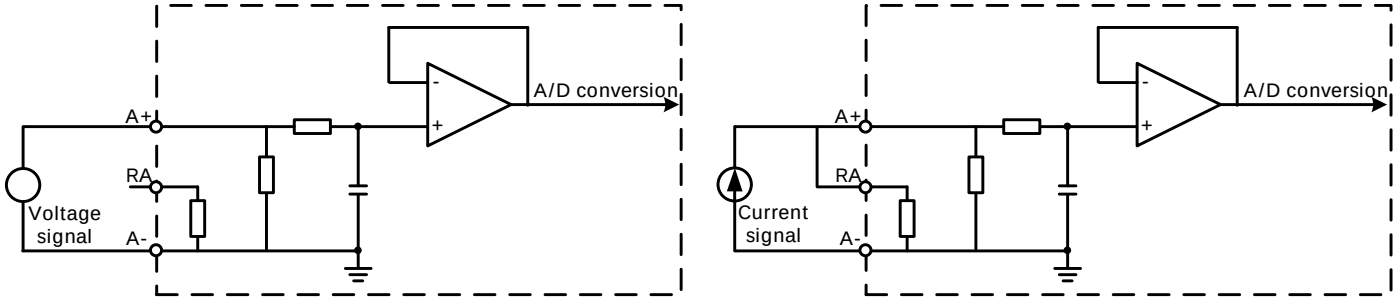

Figure 37 Input Channel (AI)

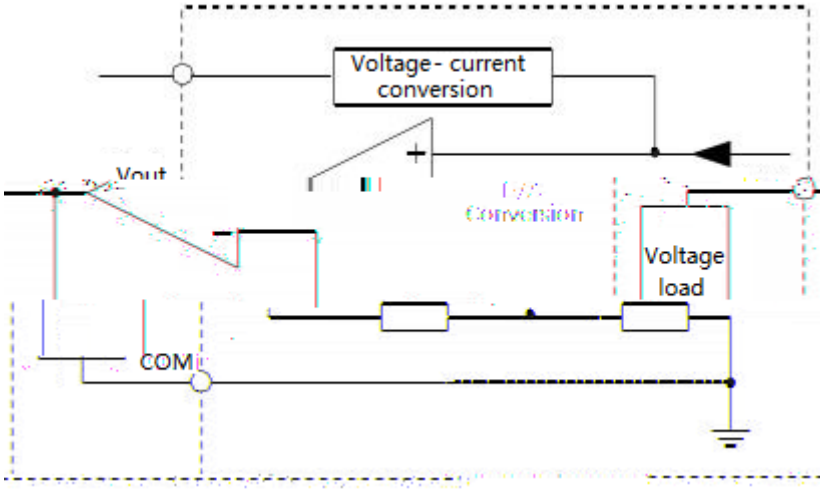

Figure 38 Output Channel (AO)

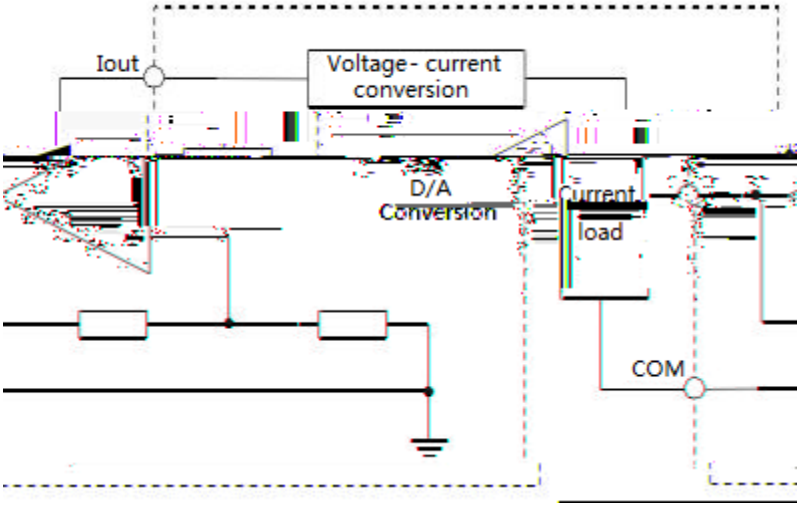

Figure 39 Output Channel (AO)

Beijing HollySys Intelligent Technologies Co., Ltd. All Rights Reserved

LE5107L is a CPU module of LE Series micro PLC which can complete control, detection, diagnosis, RS485 communication needed for system. Functions specifically achieved as follows: RUN/STOP switch selects running and stopping mode of module; RTC records operation time; equipped with USB memory card interface to facilitate download user program; RS485 interface provides channel to download application program and supports access to peripheral device and multi-PLC interconnection; equipped with 14 DI and10 DO.

Table 23 Technical Specifications

On-board I/O	14 DI / 10 DO	Input	Rated voltage	100~240VAC
			Permissible range	85~264VAC 50/60Hz
I/O expansion module (max.)	4 (total modules power consumption CPU rating)		Current consumption (max.)	300mA
Number of expansion board	1	External output voltage	Rated voltage	Not supported
Programming language	LD/ST/CFC/SFC		Permissible range	Not supported
Program memory	128K bytes	External output current (max.)	+24VDC (supply for expansion bus)	190mA
Data memory	10496 bytes		+5VDC (supply for expansion bus)	550mA
Power-loss retentive memory	2K bytes	Hold up time (loss of power)		10ms
Memory card	Memory card with USB interface	Communication Specifications		
HSC	2 HSC at 5KHz for single phase	Communication interface	2 RS485	
	1 HSC at 20KHz for A/B phase	Interface type	PS/2, pluggable terminals	
Pulse catch	2	Baud rates (bps)	1200, 2400, 4800, 9600, 19200, 38400, 57600, 115200	
Fast external interruption	2			

Beijing HollySys Intelligent Technologies Co., Ltd. All Rights Reserved

Frequency measurement	Not supported	Communication protocol	Proprietary protocol, Modbus master-slave, free port communication protocol, multi-PLC interconnection (only for terminal connecting)
Basic instruction processing time	s		
Input Specifications		Output Specifications	
Number of inputs	14	Number of outputs	10
Input type	Sink/source	Output type	Relay
Rated voltage	24VDC	Permissible range	5 30VDC or 5 250VAC
Permissible range	0 30VDC	Output current	2A (resistance load)
Logic 1 signal	15~30VDC, permissible min. current 4mA	Rated current per common (max.)	8A
Logic 0 signal	0~5VDC, permissible max. current 1mA	ON state resistance	(max.)
Filtering parameter	No filtering, 5ms, 10ms, 20ms, 50ms, 100ms	Switching frequency (max.)	1Hz
		Mechanical life of relay	No load: up to 10,000,000 open/close cycles
Isolation mode	Optocoupler (field side to system)		Rated resistance 2A load: up to 100,000 open/close cycles
Isolation groups	1	Isolation mode	Relay isolation (field side to system)
Isolation withstand voltage	500VAC for 1minute, leakage current <5mA	Isolation groupsI	

Beijing HollySys Intelligent Technologies Co., Ltd. All Rights Reserved

channel (DO), and wiring is easy and convenient and is secured with screw, which is a typical field connection case.

Figure 40 Upper Terminals Definition and Wring Diagram Lower Terminals Definition and Wring Diagram

Table 24 Terminal Identification

	Grounding	L	Fire wire
	No connection	N	Null wire
	No connection		No connection
	No connection	M	Common of Input
I0.0	Fast external interruption 1/ Pulse catch 1/ single-phase counter 1/ A/B phase counter phase A / Ordinary input		Fast external interruption 2/ pulse catch 2/ single-phase counter 2/ Ordinary input
I0.2	Single-phase counter 1 reset /A/B phase counter reset /Ordinary input		

Beijing HollySys Intelligent Technologies Co., Ltd. All Rights Reserved

2L	Common of Output Q0.4 Q0.7		No connection
Q0.4	Ordinary output	Q0.5	Ordinary output
Q0.6	Ordinary output	Q0.7	Ordinary output
3L	Common of Output (Q1.0 Q1.1)		No connection
Q1.0	Ordinary output	Q1.1	Ordinary output

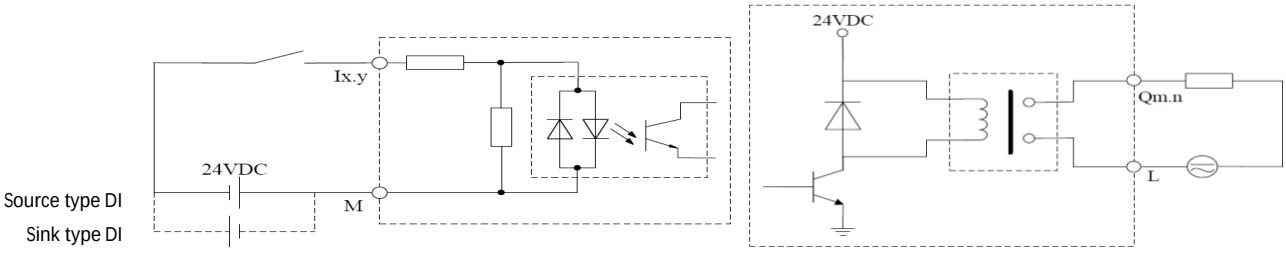

Figure 41 Electrical Schematic Diagram of Input Electrical Schematic Diagram of Output

LE5108 is a CPU module of LE Series micro PLC which can complete control, detection, diagnosis, RS485 communication needed for system. Functions specifically achieved as follows: RUN/STOP switch selects running and stopping mode of module; RTC records operation time; equipped with USB memory card interface to facilitate download user program; RS485 interface provides channel to download application program and supports access to peripheral device and multi-PLC interconnection; equipped with 24 DI and16 DO. It is a CPU module with relatively strong control capability.

Table 25 Technical Specifications

On-board I/O	24 DI/ 16 DO	Input	Rated voltage	24VDC
I/O expansion module (max.)	20 (total module power consumption CPU rating)		Permissible range	20.4 28.8VDC

Beijing HollySys Intelligent Technologies Co., Ltd. All Rights Reserved

Number of expansion board	1		Current consumption (max.)	2200mA@24VDC
Programming language	LD/ST/CFC/SFC	External output voltage		24VDC
Program memory	256K bytes	External output current (max.)	+24VDC (supply for expansion bus)	950mA
Data memory	64K bytes		+24VDC(supply for peripheral device)	400mA
Power-loss retentive memory	8K bytes		+5VDC (supply for expansion bus)	2500mA
Memory card	Memory card with USB interface	Hold up time (loss of power)		10ms
HSC	8 HSC at 200KHz for single phase(Ix0.0~Ix0.3, Ix1.4~Ix1.7)	Output Specifications		
	4 HSC at 100KHz for A/B phase(Ix0.0~Ix0.3, Ix1.4~Ix1.7)	Number of outputs	16	
Pulse output (max.)	4, 100KHz(Qx0.0~Qx0.3)	Output type	Transistor	
Pulse catch	8 (Ix0.0~Ix0.3, Ix1.4~Ix1.7)	Rated voltage	24VDC	
Fast external interruption	6(Ix0.0~Ix0.3, Ix1.4, Ix1.5)	Permissible range	20.4 28.8VDC	
Frequency measurement	4(Ix0.0~Ix0.3)	Output current	Max. 500mA for PTO channel; max. 1A for ordinary channel	
Basic instruction processing time	s	Current per common (max.)	2A max. for PTO channel; 4A max. for ordinary channel	
Input Specifications		Residual voltage	0.5V (output logic 1 at current 1A)	
Number of inputs	24	On state resistance	(typical), (max.)	
Input type	Sink/source	Isolation mode	Optocoupler (field side to system)	
Rated voltage	24VDC	Isolation groups	4	
Permissible range	0 30VDC	Isolation withstand voltage	500VAC for 1 minute, leakage current <5mA	
Logic 1 signal	15~30VDC, permissible	Communication Specifications		

Beijing HollySys Intelligent Technologies Co., Ltd. All Rights Reserved

	min. current 3mA		
Logic 0 signal	0~5VDC, permissible max. current 1mA	Communication interface	2 RS485
Filtering parameter	Ix0.0~Ix0.3, Ix1.4~Ix1.7: No filtering, s, s, s,100 s, s, 1ms, 5ms, 10ms, 20ms, 50ms, 100ms, see Note	Interface type	PS/2, pluggable terminals
		Baud rates (bps)	1200, 2400, 4800, 9600, 19200, 38400, 57600, 115200
Isolation mode	Optocoupler (field side to system)		
Isolation groups	1	Communication protocol	Proprietary protocol, Modbus master-slave, free port communication protocol, multi-PLC interconnection (only for terminal interface)
Isolation withstand voltage	500VAC for 1 minute, leakage current <5mA		
Physical Specifications 40			
Dimensions W x H x D (mm)	147×97×90	Operating temperature	-40 70

Beijing HollySys Intelligent Technologies Co., Ltd. All Rights Reserved

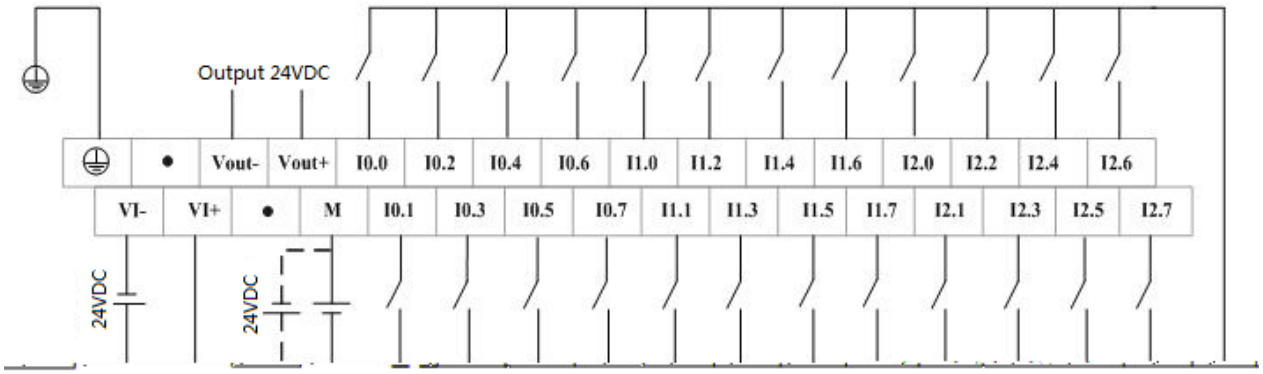

Figure 42 Upper Terminal Definition and Wiring

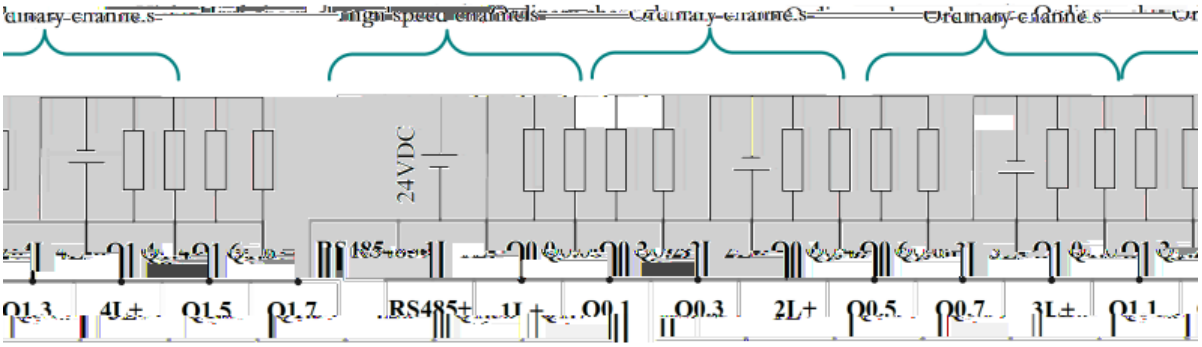

Figure 43 Lower Terminal Definition and Wiring

- Wiring description

  High-speed channel output mode for the open set; ordinary channel output mode for the high-side drive, wiring as shown in Figure 43.

Figure 44 wiring diagrams include two schematic diagrams of connection of high-speed output terminal and motor, the external resistance in the schematic diagrams is for example only. In actual applications, users must calculate external resistance according to their selected permissible current on input side of driver and internal resistance.

Beijing HollySys Intelligent Technologies Co., Ltd. All Rights Reserved

Figure 44 CW/CCW Mode Wiring Diagram

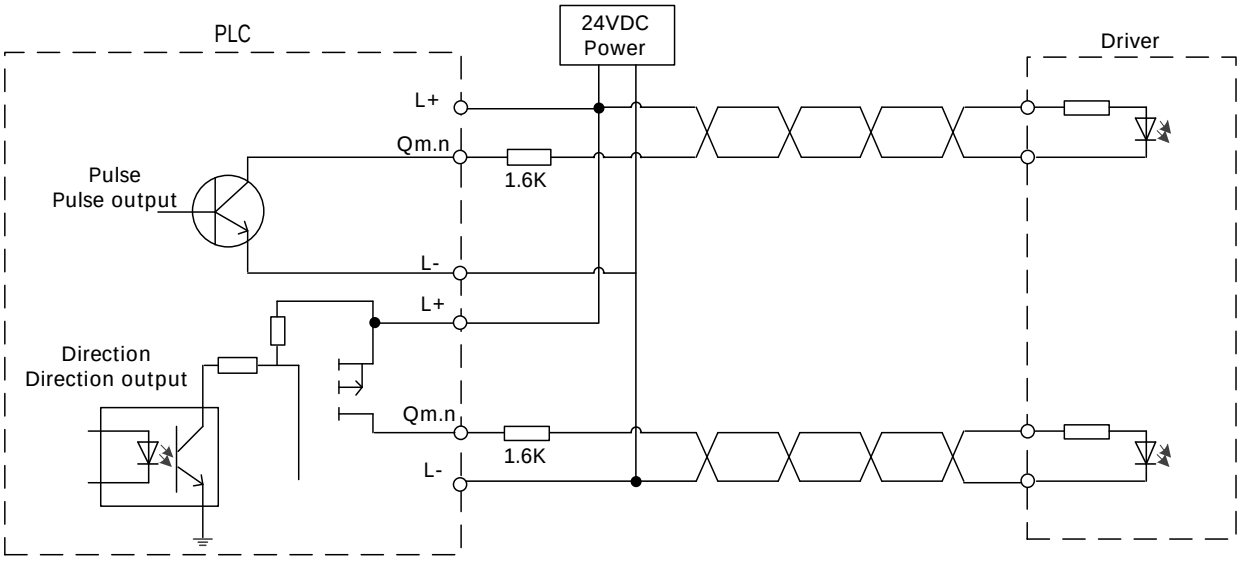

Figure 45 Pulse + Direction Mode Wiring Diagram

Description:

CW / CCW mode:

1: O

0.00(2-7.8)]TJ0 Tc 0 Tw 1.10BDC.378 .0001 T 0 Td[(P1.10BDC45Tc 0 Td(O)T6 w 1 j 1 J 0 0 m22 0 lS.51.2 ( )0.6 (/)-12.7 ( )-1
5:8 (:)29W6 1 (O)T]0.00(2-7.8)]TJ0 Tc 0 Tw 1.10BDC.378 .0001 T 0 Td[(P1.10BDC45Tc 0 Td(O)T6 w 1 j 1 J 0 0 m22 0 lS.51.

Beijing HollySys Intelligent Technologies Co., Ltd. All Rights Reserved

	Ordinary input		
I2.6	Single-phase counter 7 reset/ A/B phase counter 4 reset/ Ordinary input	I2.7	Single-phase counter 8 reset/ Ordinary input
Terminal Identification	Description	Terminal Identification	Description
RS485-	RS485 Communication	RS485+	RS485 Communication
1L-	Load driving power supply 1 negative Q0.0 Q0.3	1L+	Load driving power supply 1 positive Q0.0 Q0.3
Q0.0	High-speed output / Ordinary output	Q0.1	High-speed output / Ordinary output
Q0.2	High-speed output / Ordinary output	Q0.3	High-speed output / Ordinary output
2L-	Load driving power supply 2 negative Q0.4 Q0.7	2L+	Load driving power supply 2 positive Q0.4 Q0.7
Q0.4	Ordinary output	Q0.5	Ordinary output
Q0.6	Ordinary output	Q0.7	Ordinary output
3L-	Load driving power supply 3 negative Q1.0 Q1.3	3L+	Load driving power supply 3 positive Q1.0 Q1.3
Q1.0	Ordinary output	Q1.1	Ordinary output
Q1.2	Ordinary output	Q1.3	Ordinary output
4L-	Load driving power supply 4 negative Q1.4 Q1.7	4L+	Load driving power supply 4 positive Q1.4 Q1.7
Q1.4	Ordinary output	Q1.5	Ordinary output
Q1.6	Ordinary output	Q1.7	Ordinary output

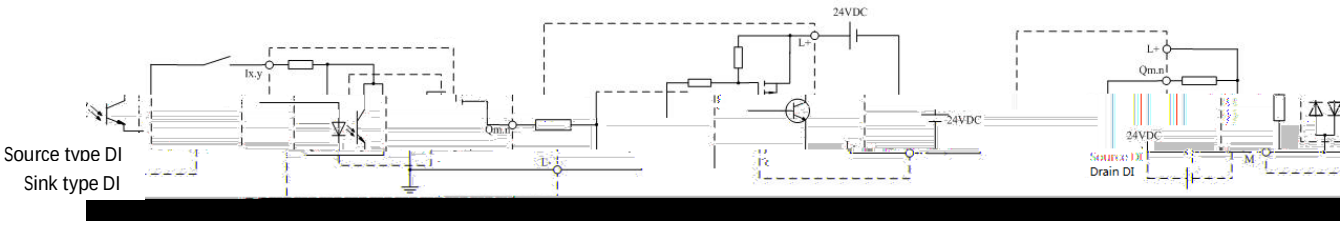

Figure 46 Input Channel Ordinary Output Channel High-speed Output Channel

Beijing HollySys Intelligent Technologies Co., Ltd. All Rights Reserved

LE5109L is a CPU module of LE Series micro PLC which can complete control, detection, diagnosis, RS485 communication needed for system. Functions specifically achieved as follows: RUN/STOP switch selects running and stopping mode of module; RTC records operation time; equipped with USB memory card interface to facilitate download user program; RS485 interface provides channel to download application program and supports access to peripheral device and multi-PLC interconnection; equipped with 24 DI and16 DO.

Table 27 Technical Specifications

On-board I/O	24 DI / 16 DO	Input	Rated voltage	100~240VAC
			Permissible range	85~264VAC 50/60Hz
I/O expansion module (max.)	7 (total modules power consumption CPU rating)		Current consumption (max.)	500mA
Number of expansion board	1	External output voltage	Rated voltage	Not supported
Programming language	LD/ST/CFC/SFC		Permissible range	Not supported
Program memory	128K bytes	External output current (max.)	+24VDC (supply for expansion bus)	400mA
Data memory	10496 bytes		+5VDC (supply for expansion bus)	1000mA
Power-loss retentive memory	2K bytes	Hold up time (loss of power)		10ms
Memory card	Memory card with USB interface	Communication Specifications		
HSC	2 HSC at 5KHz for single phase	Communication interface	2 RS485	
	1 HSC at 20KHz for A/B phase	Interface type	PS/2, pluggable terminals	
Pulse catch	2	Baud rates (bps)	1200, 2400, 4800, 9600, 19200, 38400,	

Beijing HollySys Intelligent Technologies Co., Ltd. All Rights Reserved

Fast external interruption	2		57600, 115200
Frequency measurement	Not supported	Communication protocol	Proprietary protocol, Modbus master-slave, free port communication protocol,multi-PLC interconnection(only for terminal connecting)
Basic instruction processing time	s		

Input

Beijing HollySys Intelligent Technologies Co., Ltd. All Rights Reserved

LE5109L is connected with an external 220 VAC power and has two pluggable terminals (16x2 and 13x2), the upper terminal offers digital input channel (DI), the lower terminal offers digital output channel (DO), and connection is easy and convenient and is secured with screw, which is a typical field connection case.

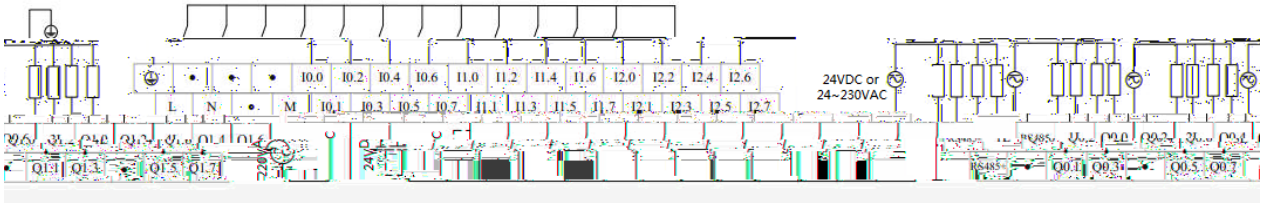

Figure 47 Upper Terminals Definition and Wring Lower Terminals Definition and Wring

Table 28 Terminal Identification

⏚	Grounding	L	Fire wire	RS485-	Negative (RS485-)	RS485+	Positive (RS485+)
	No connection	N	Null line	1L	Common of Output (Q0.0 Q0.3)		No connection
	No connection		No connection	Q0.0	Ordinary output	Q0.1	Ordinary output
	No connection	M	Common of Input	Q0.2	Ordinary output	Q0.3	Ordinary output
I0.0	Fast external interruption 1/ Pulse catch 1/single-phase counter 1/ A/B phase counter phase A / Ordinary input	I0.1	Fast external interruption 2/ Pulse catch 2/single-phase counter 2/ Ordinary input	2L	Common of Output Q0.4 Q0.7		No connection
I0.2	Single-phase counter 1 reset /A/B	I0.3	Single-phase counter 2 reset/Ordinary input	Q0.4	Ordinary output	Q0.5	Ordinary output

Beijing HollySys Intelligent Technologies Co., Ltd. All Rights Reserved

	phase counter reset /Ordinary input						
I0.4	A/B phase counter phase B / Single-phase counter 1 direction control / Ordinary input	I0.5	Single-phase counter 2 direction control / Ordinary input	Q0.6	Ordinary output	Q0.7	Ordinary output
I0.6	Ordinary input	I0.7	Ordinary input	3L	Common of Output (Q1.0 Q1.3)		No connection
I1.0	Ordinary input	I1.1	Ordinary input	Q1.0	Ordinary output	Q1.1	Ordinary output
I1.2	Ordinary input	I1.3	Ordinary input	Q1.2	Ordinary output	Q1.3	Ordinary output
I1.4	Ordinary input	I1.5	Ordinary input	4L	Common of Output (Q1.4 Q1.7)		No connection
I1.6	Ordinary input	I1.7	Ordinary input	Q1.4	Ordinary output	Q1.5	Ordinary output
I2.0	Ordinary input	I2.1	Ordinary input	Q1.6	Ordinary output	Q1.7	Ordinary output
I2.2	Ordinary input	I2.3	Ordinary input	—	—	—	—
I2.4	Ordinary input	I2.5	Ordinary input	—	—	—	—
I2.6	Ordinary input	I2.7	Ordinary input	—	—	—	—

- Only one can be chosen among pulse capture, high-speed counting and quick external interrupt. Please be cautious about filtering parameter of channel when using high-speed counting and quick external interrupt.

Beijing HollySys Intelligent Technologies Co., Ltd. All Rights Reserved

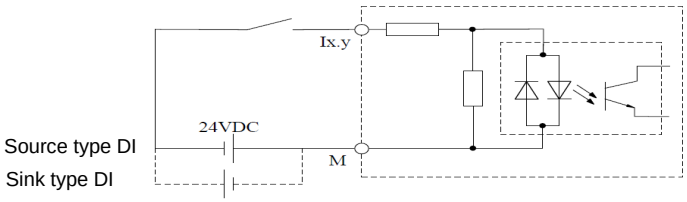

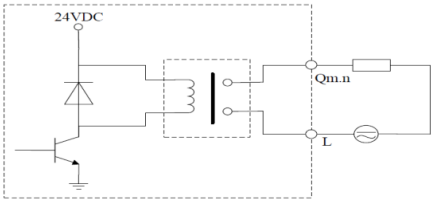

Figure 48 LE5109L Input ***LE5109L Output***

LE5118 is a CPU module of LE Series micro PLC which can complete control, detection, diagnosis, RS485 and Ethernet communication are supported. Functions specifically achieved as follows: RUN/STOP switch selects running and stopping mode of module; RTC records operation time; equipped with TF card interface to upgrade project of controller; Ethernet interface provides channel to download application program and RS485 interface supports access to peripheral device and multi-PLC interconnection; equipped with 24 DI and16 DO. It is a CPU module with relatively strong control capability.

Table 29 Technical Specifications

On-board I/O	24 DI/ 16 DO	Input	Rated voltage	24VDC
Clock rate	528MHz			
I/O expansion module (max.)	20 (total module power consumption CPU rating)		Permissible range	20.4 28.8VDC
Number of expansion board	1		Current consumption (max.)	2200mA@24VDC
Programming language	LD/ST/CFC/SFC	External output voltage		24VDC
Program memory	456K bytes	External output current (max.)	+24VDC (supply for expansion bus)	950mA
Data memory	64K bytes		+24VDC(supply for peripheral device)	400mA

Beijing HollySys Intelligent Technologies Co., Ltd. All Rights Reserved

Power-loss retentive memory	8K bytes (50s after the controller is powered on, the Power-loss retentive function will effective)		+5VDC (supply for expansion bus)	2500mA
TF card	Supported, used to upgrade project of controller	Hold up time (loss of power)		10ms
HSC	8 HSC at 200KHz for single phase (Ix0.0~Ix0.3, Ix1.4~Ix1.7)	Output Specifications		
	4 HSC at 100KHz for A/B phase (Ix0.0~Ix0.3, Ix1.4~Ix1.7)	Number of outputs	16	
Pulse output	4, 100KHz (Qx0.0~Qx0.3)	Output type	Transistor	
Pulse catch	8 (Ix0.0~Ix0.3, Ix1.4~Ix1.7)	Rated voltage	24VDC	
Fast external interruption	6 (Ix0.0~Ix0.3, Ix1.4, Ix1.5)	Permissible range	20.4 28.8VDC	
Frequency measurement	4(Ix0.0~Ix0.3)	Output current	Max. 500mA for Q0.0~Q0.7 channel; max. 1A for Q1.0~Q1.7 channel	
Real-time clock (holding tiime)	Battery powered (not less than 3 years), replaceable. Supports time formats: week/year/month/day, week/month/day/year, and week/day/month/year, with an accuracy of 30 seconds/month			
Basic instruction processing time	s	Current per common (max.)	2A max. for Q0.0~Q0.7 channel; 4A max. for Q1.0~Q1.7 channel	
Input Specifications		Residual voltage	0.5V (output logic 1 at current 1A)	
Number of inputs	24	On state resistance	(typical), (max.)	
Input type	Sink/source	Isolation mode	Optocoupler (field side to system)	
Rated voltage	24VDC	Isolation groups	4	
Permissible range	0 30VDC	Isolation withstand voltage	500VAC for 1 minute, leakage current <5mA	
Logic 1 signal	15~30VDC, permissible min. current 3mA	Communication Specifications		
Logic 0 signal	0~5VDC, permissible max. current 1mA	Communication interface (RS485)		
Filtering parameter	Ix0.0~Ix0.3, Ix1.4~Ix1.7: No filtering, s, s,	Communication interface	1 RS485	

Beijing HollySys Intelligent Technologies Co., Ltd. All Rights Reserved

	s,100 s, s, 1ms, 5ms, 10ms, 20ms, 50ms, 100ms Ordinary input: No filtering, 5ms, 10ms, 20ms, 50ms, 100ms	Interface type	Terminals (Isolation, only for communication)
Isolation mode	Optocoupler (field side to system)		
Isolation groups	1	Baud rates (bps)	1200, 2400, 4800, 9600, 19200, 38400, 57600, 115200
Isolation withstand voltage	500VAC for 1 minute, leakage current <5mA		
Physical Specifications		Communication protocol	Modbus master-slave, free port communication protocol, multi-PLC interconnection
Dimensions W x H x D (mm)	147×97×90	Communication interface (Ethernet)	
Weight	568g	Local communication port	1 Ethernet interface with default IP 192.168.0.250
Relative humidity	5%~95% (non-condensing)	Interface type	RJ45
Operating temperature	-20 60	Number of visits	The number of master stations that can be accessed simultaneously by the controller as slave stations is not more than 5 The number of slave stations that can be connected simultaneously by the controller as master stations is not more than 10
Storage temperature	-40 70	Communication rate	10/100Mbps self negotiation
		Communication protocol	ModbusTCP master-slave protocol AT communication protocol (for program uploading and downloading) Ethernet multicomputer interconnection Ethernet Free Port Protocol

Beijing HollySys Intelligent Technologies Co., Ltd. All Rights Reserved

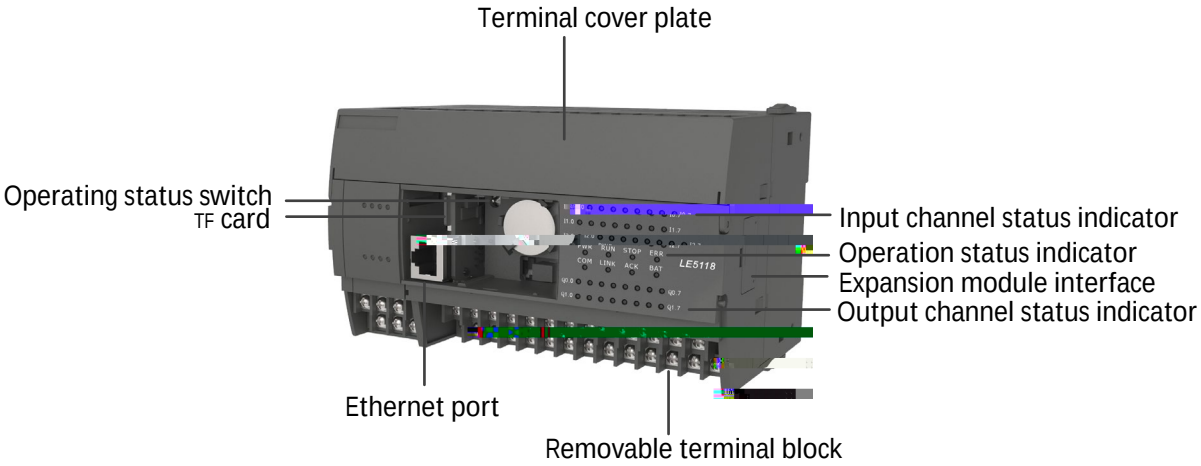

Figure 49 Module Structure

Table 30 Interface Definition

TF card	For controller engineering upgrade
Operating status switch	Select the operation / stop mode of the module, see Chapter 3.1.3 operation mode
Terminal cover plate	Terminal protection cover, one at the top and one at the bottom 24 input channel status indicators, indicating the working status of the channel
Input channel status indicator	Indicates the operation status and communication status of the module.
Operation status indicator	Used for communication between modules and expansion modules, connecting Le i/o modules.
Expansion module interface	Used for communication between modules and expansion modules, connecting Le i/o modules.
Output channel status indicator	16 input channel status indicators to indicate the working status of the channel
Removable terminal block	2, double row pluggable terminals, upper row 16*2, lower row 13*2
Ethernet port	It is used to connect at programming software, download user programs, support Modbus TCP master-slave protocol

Beijing HollySys Intelligent Technologies Co., Ltd. All Rights Reserved

- Q0.0~Q0.7 has short-circuit protection function inside. If a short circuit occurs in one channel, it will not affect other channels. The circuit needs to be restored to normal, and the on-site test needs to be powered on again.

Figure 52 wiring diagrams include two schematic diagrams of connection of Q0.0~Q0.7 output terminals and motor, the external resistance in the schematic diagrams is for example only. In actual applications, users must calculate external resistance according to their selected permissible current on input side of driver and internal resistance.

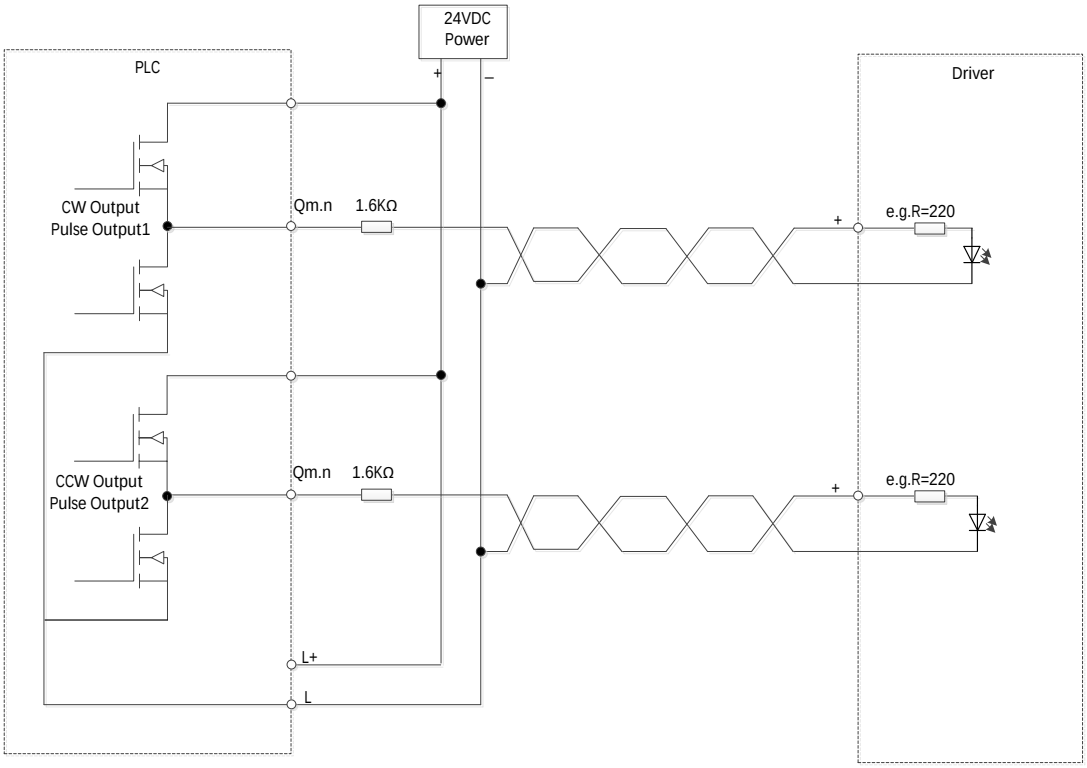

1

Beijing HollySys Intelligent Technologies Co., Ltd. All Rights Reserved

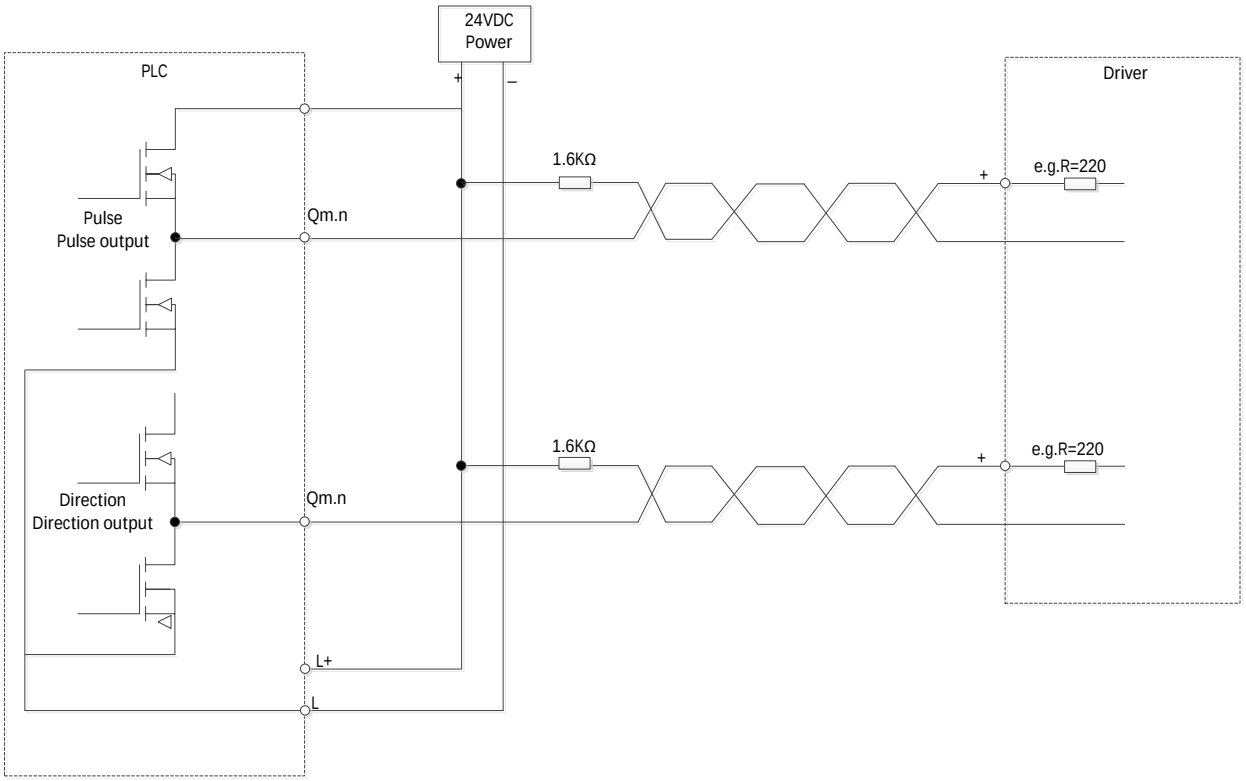

Beijing HollySys Intelligent Technologies Co., Ltd. All Rights Reserved

			negative
	No connection	VI+	Input power supply 24VDC positive
Vout-	Output 24VDC negative		No connection
Vout+	Output 24VDC positive	M	Common of input
I0.0	Fast external interruption 1/ Pulse catch 1/ Frequency measurement channel 1/single-phase counter 1/ A/B phase counter1 phase A / Ordinary input	I0.1	Fast external interruption 2/ Pulse catch 2/ Frequency measurement channel 2/single-phase counter 2/ A/B phase counter1 Phase B/ Ordinary input
I0.2	Fast external interruption 3/ Pulse catch 3/ Frequency measurement channel 3/ single-phase counter 3/ A/B phase counter 2 phase A / Ordinary input	I0.3	Fast external interruption 4/ Pulse catch 4/ Frequency measurement channel 4/ single-phase counter 4/ A/B phase counter 2 phase B / Ordinary input
I0.4	Single-phase counter 1 direction control / Ordinary input	I0.5	Single-phase counter 2 direction control/ Ordinary input
I0.6	Single-phase counter 3 direction control / Ordinary input	I0.7	Single-phase counter 4 direction control/ Ordinary input
I1.0	Single-phase counter 1 reset/ A/B phase counter 1 reset/Ordinary input	I1.1	Single-phase counter 2 reset/ Ordinary input
I1.2	Single-phase counter 3 reset / A/B phase counter 2 reset / Ordinary input	I1.3	Single-phase counter 4 reset/ Ordinary input
I1.4	Fast external interruption 5/ Pulse catch 5/ single-phase counter 5/ A/B phase counter 3 phase A / Ordinary input	I1.5	Fast external interruption 6/ Pulse catch6/ single-phase counter 6/ A/B phase counter 3 phase B / Ordinary input
I1.6	Pulse catch 7/ single-phase counter 7/ A/B phase counter 4 phase A / Ordinary input	I1.7	Pulse catch8/ single-phase counter 8/ A/B phase counter 4 phase B / Ordinary input
I2.0	Single-phase counter 5 direction control/ Ordinary input	I2.1	Single-phase counter 6 direction control/ Ordinary input
I2.2	Single-phase counter 7 direction control/ Ordinary input	I2.3	Single-phase counter 8 direction control/ Ordinary input
I2.4	Single-phase counter 5 reset/ A/B phase counter 3 reset/ Ordinary input	I2.5	Single-phase counter 6 reset/ Ordinary input
I2.6	Single-phase counter 7 reset/	I2.7	Single-phase counter 8 reset/

Beijing HollySys Intelligent Technologies Co., Ltd. All Rights Reserved

Reserved

Indicators monitor the working status of module in real time, including 24 input channel indicators, 8 operation status indicators and 16 output channel indicators.

Table 32 Definition of Indicator

PWR(Power indicator)	Green	ON	System power supply is normal
		OFF	The system is not powered on
RUN(Operation status indicator)	Green	ON	PLC is in operation state, and the user's project is not powered on during operation
		OFF	User project is not running
STOP(Stop status indicator)	Yellow	ON	The PLC is in the stopped state, and the user project stops running
		OFF	PLC in non stop state
LINK(Ethernet connection indicator)	Red	ON	Indicates that there is some or some diagnosable fault in the PLC
		OFF	System isnormal
	Green	Flashing	With data communication
		OFF	No data communication
	Green	ON	Ethernet interface successfully connected
		OFF	Ethernet interface failed to connect
ACK(Ethernet communication			

Beijing HollySys Intelligent Technologies Co., Ltd. All Rights Reserved

Concept

The user project in the controller can be upgraded through the TF card. The controller detects the project file in the TF card during startup to upgrade. If the TF card is inserted after the controller is started, it cannot be upgraded and needs to be powered off and restarted again.

You need to prepare.at engineering documents and HoliSD.cfg configuration file before upgrading. The format of HoliSD.cfg configuration file is shown in the following figure.

File naming requirements:

- .at project file name must match project file names in the HoliSD.cfg configuration file.
- .at project file name length meets no more than 8 bytes before and no more than 3 bytes after. For example: xxxxxxxx.xxx
- The configuration file must be named as HoliSD.cfg.
- The configuration file format must be created as shown in Figure.

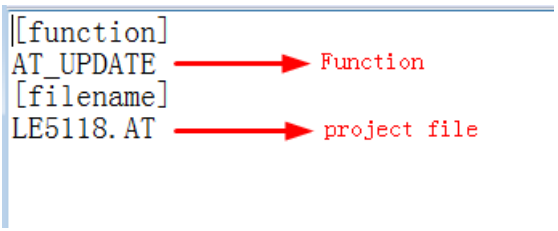

Figure 55 HoliSD.cfg configuration file format

Requirements

You need to copy .at engineering documents and HoliSD.cfg configuration file to TF card.

Steps

To upgrade the user project of controller, follow the steps below:

Insert the TF card into the TF card slot.

The controller is powered off and restarted.

After the PWR indicator light is on, the upgrade starts. At this time, the RUN light and STOP light flash alternately. When the RUN light is on, the project upgrade is completed. When the upgrade fails, the STOP light and ERR light are always on at the same time. Please check whether the file meets the naming requirements.

Beijing HollySys Intelligent Technologies Co., Ltd. All Rights Reserved

LE5119 is a CPU module of LE Series micro PLC which can complete control, detection, diagnosis, RS485 and Ethernet communication are supported. Functions specifically achieved as follows: RUN/STOP switch selects running and stopping mode of module; RTC records operation time; equipped with TF card interface to upgrade project of controller; Ethernet interface provides channel to download application program and RS485 interface supports access to peripheral device and multi-PLC interconnection; equipped with 24 DI and16 DO. It is a CPU Module with relatively strong control capability.

Table 33 Technical Specifications

On-board I/O	24 DI / 16 DO	Input	Rated voltage	100~240VAC
Clock rate	528MHz		Permissible range	85~264VAC 50/60Hz
I/O expansion module (max.)	20 (total modules power consumption CPU rating)		Current consumption (max.)	1000mA
Number of expansion board	1	External output voltage	24VDC	
Programming language	LD/ST/CFC/SFC	External output current (max.)	+24VDC (supply for expansion bus)	950mA
Program memory	456K bytes		+24VDC (supply for peripheral device)	400mA
Data memory	64K bytes		+5VDC (supply for expansion bus)	2500mA
Power-loss retentive memory	8K bytes	Hold up time (loss of power)		80ms

Beijing HollySys Intelligent Technologies Co., Ltd. All Rights Reserved

TF card	Supported, used to upgrade project of controller		
Program download function	Supported	Number of outputs	16
Program upload function	Supports programs encryption and projects encryption	Output type	Relay
Real-time clock (holding tiime)	Battery powered (not less than 3 years), replaceable. Supports time formats: week/year/month/day, week/month/day/year, and week/day/month/year, with an accuracy of 30 seconds/month	Rated voltage	24VDC or 24 230VAC
Basic instruction processing time	s	Permissible range	5 30VDC or 5 250VAC
Input Specifications		Output current	2A (resistance load)
Number of inputs	24	Rated current per common (max.)	8A
Input type	Sink/source	ON state resistance	(max.)
Rated voltage	24VDC	Switching frequency (max.)	1Hz
Permissible range	0 30VDC	Lifetime mechanical	No load: up to 10,000,000 open/close cycles
Logic 1 signal	15~30VDC, permissible min. current 3mA		Rated resistance 2A load: up to 100,000 open/close cycles
Logic 0 signal	0~5VDC, permissible max. 1mA	Isolation mode	Relay isolation (field side to system)
Filtering parameter	No filtering, 5ms, 10ms, 20ms, 50ms, 100ms	Isolation groups	4
		Isolation withstand voltage	2500VAC for 1minute, leakage current <5mA
Isolation mode	Optocoupler (field side to system)	Communication Specifications	
Isolation groups	1	Communication interface(RS485)	1 RS485

Beijing HollySys Intelligent Technologies Co., Ltd. All Rights Reserved

Isolation withstand voltage	500VAC for 1 minute, leakage current <5mA	Interface type	Terminals (Isolation, only for communication)
Physical Specifications		Baud rates (bps)	1200, 2400, 4800, 9600, 19200, 38400, 57600, 115200
Dimensions W x H x D (mm)	147×97×90	Communication protocol	Proprietary protocol, Modbus master-slave, free port communication protocol, multi-PLC interconnection(only for terminal connecting)
Weight	717g	Communication interface (Ethernet)	1 Ethernet interface
Operating temperature	-20 60°C	Interface type	RJ45
Relative humidity of operating environment	5%~95% (non-condensing)	Number of visits	The number of master stations that can be accessed simultaneously by the controller as slave stations is not more than 5 The number of slave stations that can be connected simultaneously by the controller as master stations is not more than 10
Storage temperature	-40 70°C	Communication rate	10/100Mbps self negotiation
Relative humidity of storage environment	5%~95% (non-condensing)	Communication protocol	ModbusTCP master-slave protocol AT communication protocol (for program uploading and downloading) Ethernet multicomputer interconnection Ethernet Free Port Protocol

The module appearance structure is the same as LE5118. Please refer to Chapter 3.8.2 Module Structure Diagram.

Beijing HollySys Intelligent Technologies Co., Ltd. All Rights Reserved

LE5119 is connected with an external 220V AC power and has two pluggable terminals (16x2 and 13x2), the upper terminal offers digital input channel (DI), the lower terminal offers digital output channel (DO), and connection is easy and convenient and is secured with screw, which is a typical field connection case.

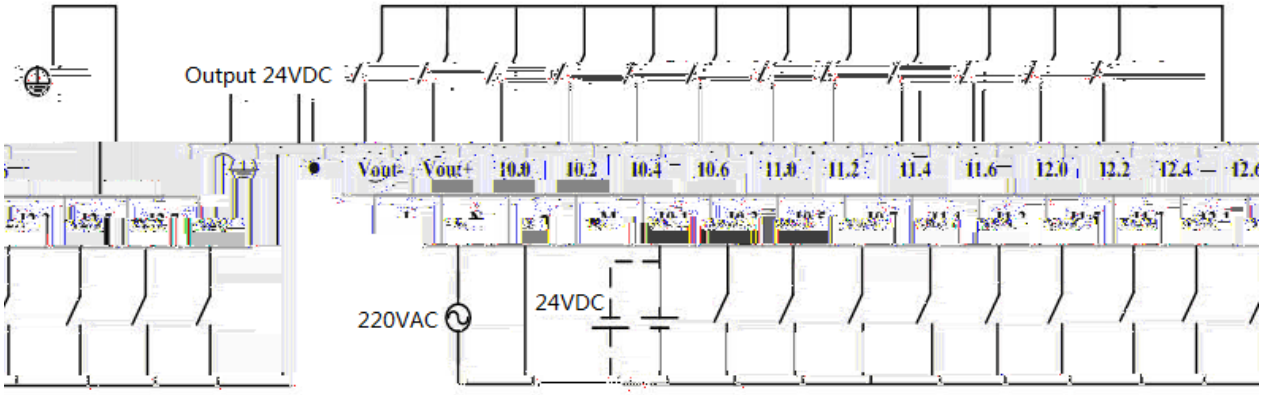

Figure 56 LE5119 Upper Terminals Definition and Wring Diagram

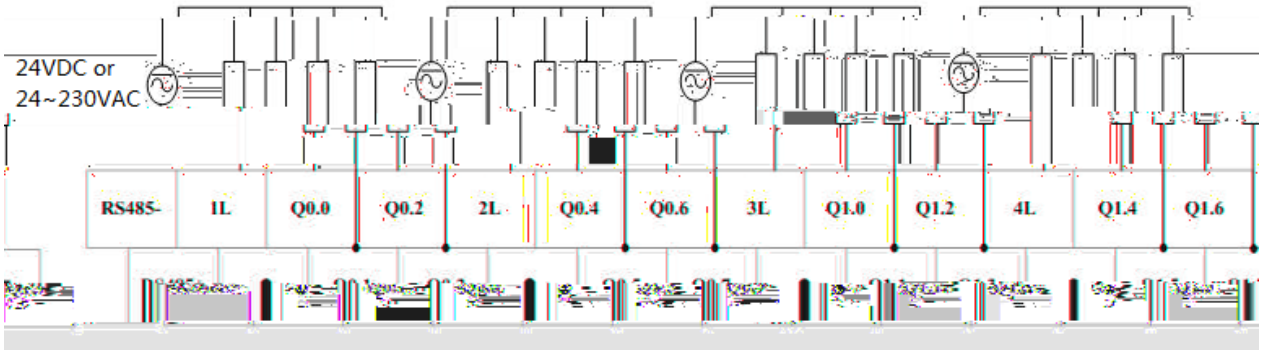

Figure 57 LE5119 Lower Terminals Definition and Wring Diagram

Table 34 Terminal Identification

⏚	Grounding	L	Fire wire
	No connection	N	Null wire
Vout-	Output 24VDC negative		No connection
Vout+	Output 24VDC positive	M	Common of Input

Beijing HollySys Intelligent Technologies Co., Ltd. All Rights Reserved

		I0.1	Ordinary input
		I0.3	Ordinary input

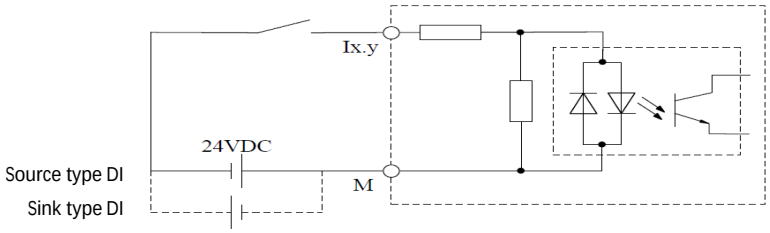

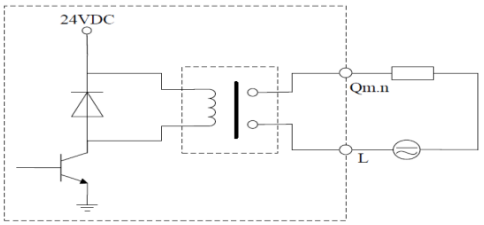

Figure 58 Electrical Schematic Diagram of Input Electrical Schematic Diagram of Output

See Chapter 3.8.5 Definition of Indicators.

See Chapter 3.8.6 Upgrade the Project in Controller.

Beijing HollySys Intelligent Technologies Co., Ltd. All Rights Reserved

LE5600 is the communication function expansion board of LE series PLC, offers 1-channel RS232 communication.

Table 35 Technical Specifications

Figure 59 LE5600 RS232 Terminal

Table 36 LE5600 Terminal Definition

Beijing HollySys Intelligent Technologies Co., Ltd. All Rights Reserved

Figure 62 the Installation of LE5600 Expansion Board

- LE expansion board can be connected to 24I/O or 40I/O CPU module;
-

LE5601 is a communication expansion board of LE series PLC and offers 1-channel RS485 communication.

Table 37 Technical Specifications

Number of communication port	1	+3.3VDC (supplied by CPU module)	1.5mA
Connection	Terminals	+5VDC (supplied by CPU module)	50mA
Communication protocol	Modbus RTU master / slave, free port communication protocol	Physical Specifications	
Communication data memory	I/Q/M	Dimension W×H×D(mm)	29×26×62

Beijing HollySys Intelligent Technologies Co., Ltd. All Rights Reserved

Baud rates	1200, 2400, 4800, 9600, 19200, 38400bps	Weight	26g
Isolation Withstand Voltage		Operating temperature	-40 70
Isolation mode	Magnetic coupling (field side to system)	Storage temperature	-40 70
Isolation withstand voltage	500VAC for 1 minute, leakage current <5mA	Relative humidity	5%~95% (non-

Beijing HollySys Intelligent Technologies Co., Ltd. All Rights Reserved

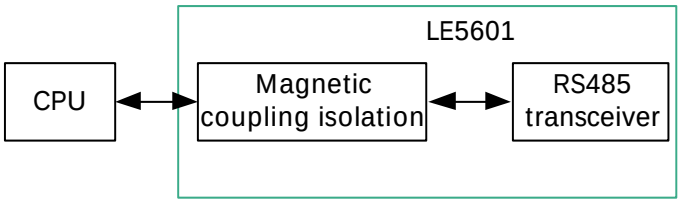

Figure 64 LE5601 Principle Diagram

Please refer to Chapter 4.1.4 Expansion Connection.

LE5610 is the function expansion board of LE series PLC, mainly completing input processing of 4 channels digital signal.

The number of input channels	4	3.3V (Provided by CPU module)	5mA
Input type	Source type/ Leakage type	24V (Provided by CPU module)	0mA
Input voltage rating	24VDC	+24 VDC (External driving voltage)	25mA
Allowed rage	0~30 VDC	Physical characteristics	
Signal of logic 1	15~30 VDC, Permissible minimum current 3 mA	Dimensions	29 mm (W) x 26 mm (H) x 62 mm (D)
Signal of logic 0	0~5 VDC, Permissible maximum current 1 mA	Weight	25g
Filter parameters	No filtering, 5ms, 10ms, 20ms, 50ms, 100ms	Working temperature	-40 70
Isolation method	Optical coupling isolation (between field and	Storage temperature	-40 70

Beijing HollySys Intelligent Technologies Co., Ltd. All Rights Reserved

	system)		
Isolation & anti-pressure	500VAC, duration of 1 min, leakage current < 5 mA	Relative humidity	5~95% (no condensation)

Channel indicator light	Green	ON	This channel is in ON state
		OFF	This channel is in OFF state

Figure 65

Beijing HollySys Intelligent Technologies Co., Ltd. All Rights Reserved

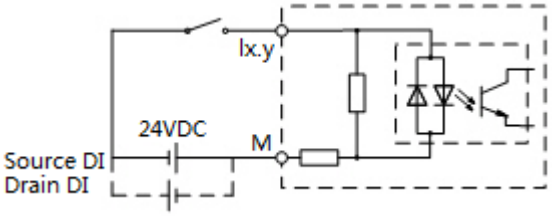

Figure 66 Electrical Schematic Diagram

Remove the cover plates on the left side of the CPU module and cover plate of lower row.

Figure 67 Removing Cover Plate Schematic

Insert extension small plate vertically into the position as shown in Figure 68 to ensure it being well installed.

Figure 68 Connect LE5610 Extension Small Plate

Beijing HollySys Intelligent Technologies Co., Ltd. All Rights Reserved

- LE small expansion plate is used by connecting with CPU module of 24 or 40 points.
- Avoid direct contact with the circuit when installing or removing.
- Prepare a screwdriver for removing.

LE5620 is the function expansion board of LE series PLC, mainly completing output processing of 4 channels of digital signal.

The number of output channels	4	Isolation & anti-pressure	500VAC, duration of 1 min, leakage current<5 mA
Output type	Transistor	Power consumption	
Output voltage	24VDC	3.3V (Provided by CPU module)	23mA
Permissible scope	20.4~28.8VDC	24V (external driving voltage)	Calculated according to actual load
Output current	1A	Physical characteristics	
On state resistance (Contact resistance)	(Typical)	Dimensions	29mm (W) x 26mm (H) x 62 mm(D)
	(Maximum)	Weight	25g
Sum of output current from common terminal	< 3 A	Working temperature	-40 70
Minimum load current (per channel)	2mA	Storage temperature	-40 70
Transistor conduction voltage drop	< 0.5V (Output logic 1, current 1A)	Relative humidity	5~95% (no condensation)

Beijing HollySys Intelligent Technologies Co., Ltd. All Rights Reserved

Channel indicator Qm.n	Green	ON	This channel is in ON state
		OFF	This channel is in OFF state

Table 40 Terminal Definition

Instructions	Negative terminal of load driving power supply	Output terminal	Output terminal
Name of terminal	L+	Q0.1	Q0.3
Instructions	Positive terminal of load driving power supply	Output terminal	Output terminal

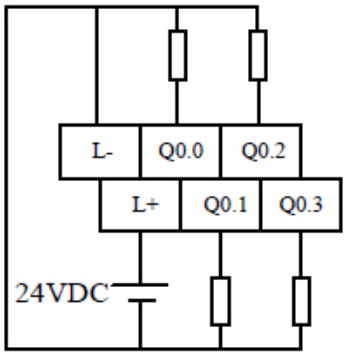

Figure 69 Terminal Wiring

Beijing HollySys Intelligent Technologies Co., Ltd. All Rights Reserved

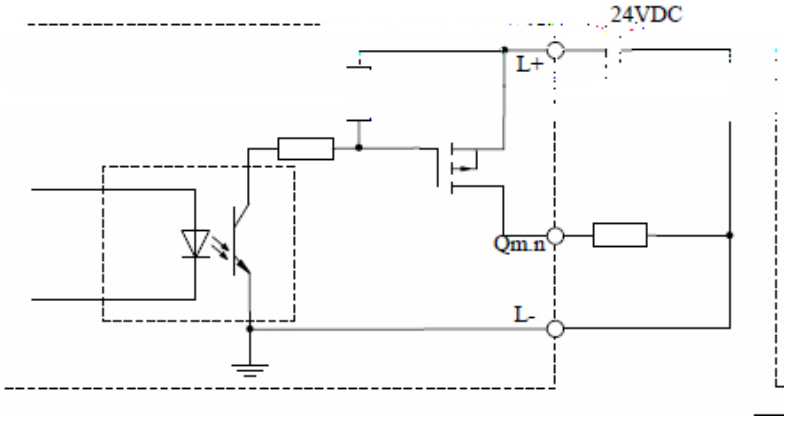

Figure 70 Electrical Schematic Diagram

Remove the cover plates on the left side of the CPU module and cover plate of lower row.

Figure 71 Removing Cover Plate Schematic

Insert extension small plate vertically into the position as shown in Figure 72 to ensure it being well installed.

Beijing HollySys Intelligent Technologies Co., Ltd. All Rights Reserved

Figure 72 Connect LE5620 Small Extension Plate

- LE small expansion plate is used by connecting with CPU module of 24 or 40 points.
- Avoid direct contact with the circuit when installing or removing.
- Prepare a screwdriver for removing.

LE5611 is an AI expansion board of LE series PLC, which provides acquisition function for two channels AI signal.

Table 41 Technical Specifications

Number of inputs		2	Input current (max.)	32mA
Input type		single-ended	Time for step response of input	1.5ms (up to 95%)
Input range	Voltage	0~10V	Common mode voltage	Signal voltage + common mode voltage <12V
	Current	0~20mA/4~20mA	Physical Specifications	
Accuracy		1% of full scale	Dimensions W x H x D mm	29 x 26 x 62
Resolution		10 bits	Weight	22g
Input	Voltage	>1M	Operating temperature	-40 70

Beijing HollySys Intelligent Technologies Co., Ltd. All Rights Reserved

impedance	Current		Storage temperature	-40 70
Maximum voltage	withstand	15V	Relative humidity	5%~95% (non-condensing)

Table 42 Signal Type and Scale Range of Input Channels

		Decimal	Hexadecimal
Voltage signal	0~10V	0~65535	0x0000~0xFFFF
Current signal	0~20mA	0~65535	0x0000~0xFFFF
	4~20mA	0~65535	0x0000~0xFFFF

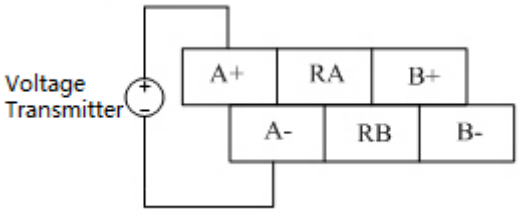

Figure 73 Terminal Definition and Wring Diagram (Voltage Type)

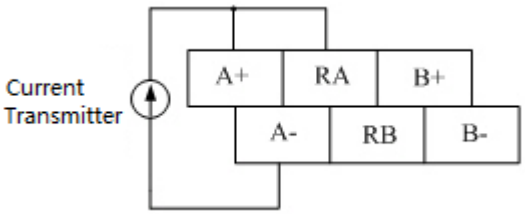

Figure 74 Terminal Definition and Wiring Diagram (Current Type)

Beijing HollySys Intelligent Technologies Co., Ltd. All Rights Reserved

- Input channels of LE5611 module can accept either voltage signal or current signal.
- Voltage signal: 'A+' connects to positive pole of voltage transmitter, 'A-' connects to negative pole of voltage transmitter. Channel B follows the same rule.
- Current signal: “RA” and “A+” connects to positive pole of current transmitter after short-circuit connection, “A-” connects to negative pole of current transmitter. Channel B follows the same rule.
- 2-wire wiring and 4-wire wiring are as shown in Figure 75. The transmitter shall be supplied power through external power and also can choose 24VDC output of CPU module according to requirement of power capacity.

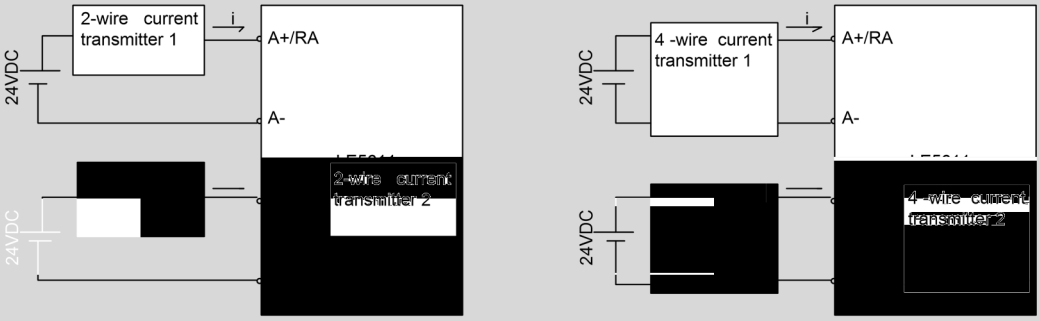

Figure 75 Wiring Diagram with 2-Wire ***Wiring Diagram with 4-Wire***

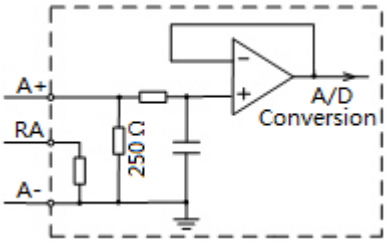

Figure 76 Electrical Schematic Diagram

Please refer to Chapter 4.1.4 Expansion Connection.

Beijing HollySys Intelligent Technologies Co., Ltd. All Rights Reserved

LE5621 is an AO expansion board of LE series PLC and can offer 1-output channel for analog signal.

Table 43 Technical Specifications

Number of outputs		1	+3.3VDC (supplied by CPU module)	10mA
Output range	Voltage	0 10V	+5VDC (supplied by CPU module)	15mA
	Current	0 20mA 4 20mA	+24VDC (external driving voltage)	Calculated by practical load
Accuracy		1% of full scale	Physical Specifications	
Resolution		12 bits	Dimension W x H x D (mm)	29×26×62

Stable time

Beijing HollySys Intelligent Technologies Co., Ltd. All Rights Reserved

Table 45 Terminal Definition and Connection

Description	Analog voltage output	Analog of common	24VDC power supply negative
Lower Terminal	Iout	•	VI+
Description	Analog current output	No connection	24VDC power supply negative

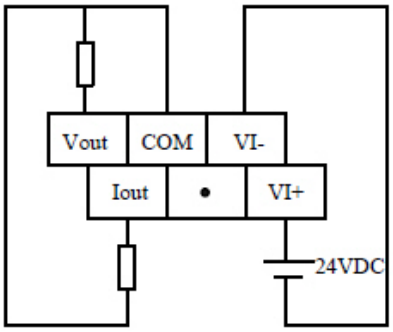

Figure 77 Terminal Wiring

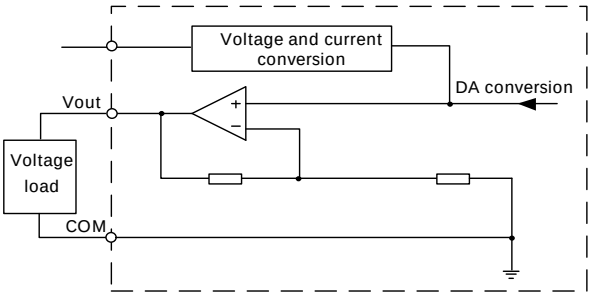

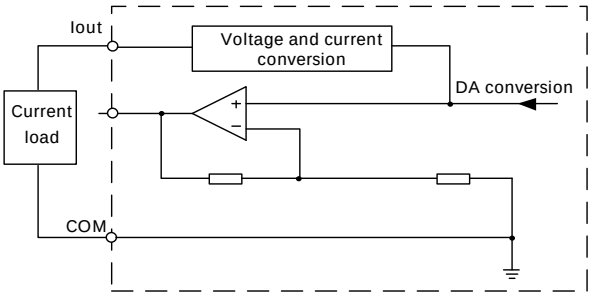

Figure 78 Voltage-Type Load Output ***Current-Type Load Output***

Please refer to Chapter 4.1.4 Expansion Connection.

Beijing HollySys Intelligent Technologies Co., Ltd. All Rights Reserved

LE5210 module is an expansion module of LE series PLC and can offer 8 input channels for digital signal.

Table 46 Technical Specifications

Number of inputs	8	Filtering parameter	No filtering, 5ms, 10ms, 20ms, 50ms, and 100ms	
Input type	Sink/source	Isolation mode	Optocoupler (field side to system)	
Rated voltage	24VDC	Isolation groups	2	
Permissible range	0 30VDC	Isolation withstand voltage	500VAC for 1 minute, leakage current <5mA	
Logic 1 signal	15~30VDC, permissible min. current 3mA	Current consumption	+24VDC (supplied by expansion bus)	0mA
Logic 0 signal	0~5VDC, permissible max. current 1mA		+5VDC (supplied by expansion bus)	50mA
Physical Specification				
Dimensions W x H x D (mm)	47×97×89	Operating temperature	-40 70	
Installation mode	DIN rail mounting or screw mounting	Storage temperature	-40 70	
Weight	137g	Relative humidity	5%~95% (non-condensing)	

Beijing HollySys Intelligent Technologies Co., Ltd. All Rights Reserved

Table 47 Definition of Indicators

Channel indicator Ix.y	Green	ON	The channel is ON.
		OFF	The channel is OFF.

8-channel digital input module LE5210 adopts two double-row pluggable terminals (3 x 2 and 3 x 2) and its definition of terminal and typical field wiring are shown below.

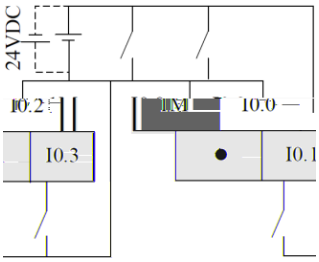

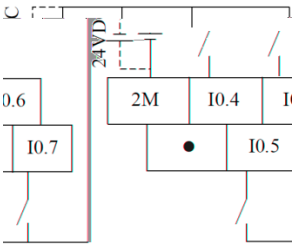

Figure 79 Upper Terminal Definition and Wiring ***Lower Terminal Definition and Wiring***

- 1M and 2M terminals of input channel (DI) are common terminal for peripheral DI. users can choose to connect them to positive terminal or negative terminal of 24VDC power to fit sink/source type DI.
- ' ' means the channel cannot be connected or connection is not available.

LE5211 module is an expansion module of LE series PLC and can offer 16 input channels for digital signal.

Beijing HollySys Intelligent Technologies Co., Ltd. All Rights Reserved

Table 48 Technical Specifications

Number of inputs	16	Filtering

Beijing HollySys Intelligent Technologies Co., Ltd. All Rights Reserved

- 1M and 2M terminals of input channel (DI) are common terminal for peripheral DI, users can choose to connect them to positive terminal or negative terminal of 24VDC power to fit sink/source type DI.
- means the channel cannot be connected or connection is not available.

- Connecting external field power supply to two DI channel of same common terminal will cause close of channel (indicating as right diagram in Figure 80), whereas no damage to module will be caused.

LE5212 module is an expansion module of LE series PLC and can offer 32 input channels for digital signal.

Table 49 Technical Specifications

Number of inputs	32	Filtering parameter	No filtering, 5ms, 10ms, 20ms, 50ms, and 100ms	
Input type	Sink/source	Isolation mode	Optocoupler (field side to system)	
Rated voltage	24VDC	Isolation groups	2	
Permissible range	0~30VDC	Isolation withstand voltage	500VAC for 1 minute, leakage current <5mA	
Logic 1 signal	15~30VDC, permissible min. current 3mA	Current consumption	+24VDC(supplied by expansion bus)	0mA
Logic 0 signal	0~5VDC, permissible max. current 1mA		+5VDC(supplied by expansion bus)	105mA
Physical Specifications				
Dimensions W x H x D (mm)	108 x 97x 89	Operating temperature	-40 70	
Installation mode	DIN rail mounting or screw mounting	Storage temperature	-40 70	

Beijing HollySys Intelligent Technologies Co., Ltd. All Rights Reserved

Weight	314g	Relative humidity	5%~95% (non- condensing)

Please refer to Chapter 5.1.2 Definition of Indicators.

The 32-

Beijing HollySys Intelligent Technologies Co., Ltd. All Rights Reserved

LE5220 module is an expansion module of LE series PLC and can offer 8 output channels for digital signal.

Table 50 Technical Specifications

Number of outputs	8	On state resistance	(typical), max.)	
Output type	Transistor	Isolation mode	Optocoupler (field side to system)	
Rated voltage	24VDC	Isolation groups	2	
Permissible range	20.4~28.8VDC	Isolation withstand voltage	500VAC for 1 minute, leaking current <5mA	
Output current	1A	Current consumption	+24VDC (supplied by expansion bus)	0mA
Current per common	<4A		+24VDC (supplied by peripheral device)	Calculated by practical load
Residual voltage	<0.5V (output logic 1 at 1A current)		+5VDC (supplied by expansion bus)	90mA
Physical Specifications				
Dimensions W x H x D (mm)	47 x 97 x 89	Operating temperature	-40 70	
Installation mode	DIN rail mounting or screw mounting	Storage temperature	-40 70	
Weight	141g	Relative humidity	5%~95% (non- condensing)	

Beijing HollySys Intelligent Technologies Co., Ltd. All Rights Reserved

Table 51 Definition of Indicators

Channel indicator Qm.n	Green	ON	The channel is ON.
		OFF	The channel is OFF.

The 8-channel DO module LE5220 adopts two double-row pluggable terminals (3 x 2 and 3 x 2), terminal definition and typical field wiring are shown in Figure 82.

Figure 82 Upper Terminal Definition and Wiring Lower Terminal Definition and Wiring

- 1L+, 2L+ and 1L- and 2L- of output channel (DO) are connected respectively with positive terminal and negative terminal of load driving power supply 24VDC.

LE5221 module is an expansion module of LE series PLC and can offer 8 output channels for digital signal.

Beijing HollySys Intelligent Technologies Co., Ltd. All Rights Reserved

Table 52 Technical Specifications

Number of outputs	8	Mechanical life of relay	No load: up to 10,000,000 open/close cycles	
Output type	Relay		Rated resistance 2A load: up to 100,000 open/close cycles	
Rated voltage	24VDC or 24 230VAC	Isolation mode	Relay (field side to system)	
Permissible range	5 30VDC or 5 250VAC	Isolation groups	2	
Output current	2A (resistance load)	Isolation withstand voltage	2500VAC for 1 minute, leakage current <5mA	
Current per common	10A	Current consumption	+24VDC (supplied by expansion bus)	60mA
On state resistance			+24VDC (supplied by peripheral device	

Beijing HollySys Intelligent Technologies Co., Ltd. All Rights Reserved

Beijing HollySys Intelligent Technologies Co., Ltd. All Rights Reserved

Current per common	<10A	Current consumption	+24VDC (supplied by expansion bus)	120mA
On state resistance			+24VDC (supplied by peripheral device)	Calculated by practical load
Switching frequency (max.)	1Hz		+5VDC (supplied by expansion bus)	135mA
Physical Specifications				
Dimensions W x H x D(mm)	70 x 97 x 89	Operating temperature	-40 70	
Mounting mode	DIN rail mounting or screw mounting	Storage temperature	-40 70	
Weight	285g	Relative humidity	5%~95% (non-condensing)	

Please refer to Chapter 6.1.2 Definition of Indicators.

The 16-channel DO m1.5 (m)BT1wIchannel D in wcanan <<

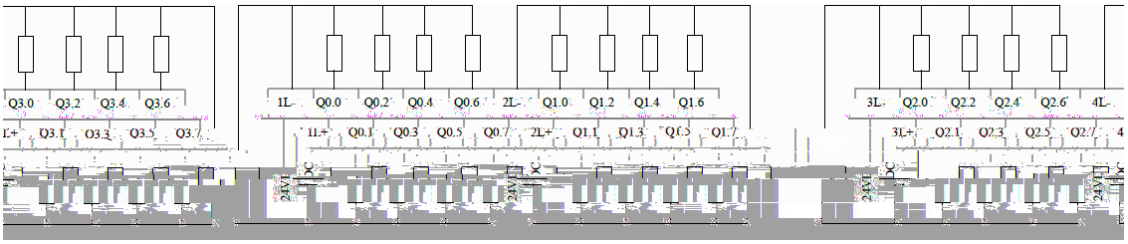

Figure 85 Upper Terminal Definition and Wiring Lower Terminal Definition and Wiring

- 1L+, 2L+, 3L+, 4L+ and 1L-, 2L-, 3L-, 4L- of the output channel (DO) are connected respectively with positive terminal and negative terminal of load driving power 24VDC.

Beijing HollySys Intelligent Technologies Co., Ltd. All Rights Reserved

height* depth)			the outside)	
Weight	215g			Output: calculated according to the actual load
Installation method	Rail or screw installation		+5VDC(provided by extension bus)	108mA
Operating temperature	-40 70	Relative humidity of operating environment	5% 95%(No condensation)	
Storage temperature	-40 70	Relative humidity of storage environment	5% 95%(No condensation)	

Beijing HollySys Intelligent Technologies Co., Ltd. All Rights Reserved

Figure 86 Upper Terminal Definition and Wiring Lower Terminal Definition and Wiring

- M terminal of input channel (DI) indicate common terminal of external DI, which can be connected with positive terminal or negative terminal of 24VDC power to match with source-type DI or leakage - type DI.
- 1L+, 2L+ and 1L-, 2L- of output channels respectively is connected to 24VDC positive terminal and negative terminal of load driving power.
- ' ' indicates no wiring of this channel or no actual physical connection.

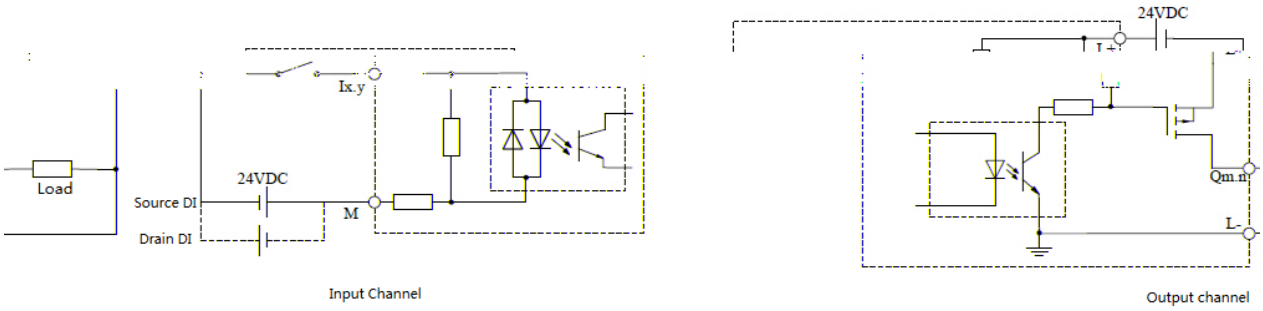

Figure 87 Electrical Schematic Diagram

LE5230 can be connected to the 10-pin hole-base of the previous module via a 10-pin socket. The 10-pin hole-base is connected to the 10-pin socket of latter module and then fix with upper and lower side lock.

Beijing HollySys Intelligent Technologies Co., Ltd. All Rights Reserved

Figure 88 Expansion Connection

Beijing HollySys Intelligent Technologies Co., Ltd. All Rights Reserved

The number of input channel	8	The number of output channel	8
Input type	Leakage type/ Source type	Output type	Relay
Rated voltage	24VDC	Rated voltage	24VDC or 24 230VAC
Permissible range	0 30VDC	Permissible range	5 30VDC or 5 250VAC
Logic 1 signal	15 30VDC, the minimum permissible current is 3mA	Output current	2A (Resistance load)
Logic 0 signal	0 5VDC, the maximum permissible current is 1mA	Sum of output current in public terminal	10A
Filtering parameter	No filtering, 5ms, 10ms, 20ms, 50ms, 100ms	On-state impedance	
Isolation method	Optical coupling isolation (between field and system)	Output on-off frequency (Max)	1Hz
Isolation group	1	Mechanical life of relay	No load: more than 10, 000, 000 times
Isolation & anti-pressure	500VAC, lasting for 1min, leak current 5mA		Rated resistance 2A load: more than 100, 000 times
Physical characteristics		Isolation method	Relay isolation (between field and system)
Size (width* height* depth)	70mm×97mm×89mm	Isolation group	2
Weight	240g	Isolation & anti-pressure	2500VAC, lasting for 1min, leakage current 5mA
Installation method	Rail installation or screw installation	Current consumption	
Operating temperature	-		

Beijing HollySys Intelligent Technologies Co., Ltd. All Rights Reserved

Relative humidity of storage environment	5% 95% (No condensation)	+5VDC (provided by extension bus)	74mA

Channel indicator light Qm.n	Green	ON	This channel is in ON state
		OFF	This channel is in OFF state

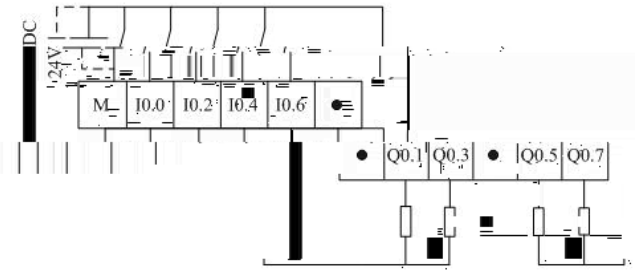

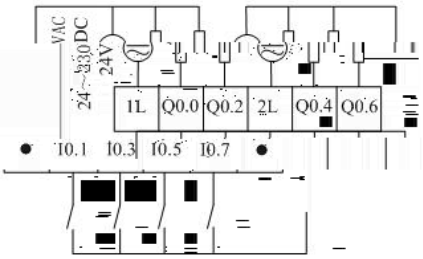

Figure 89 Upper Terminal Definition and Wiring Lower Terminal Definition and Wiring

- M terminal of input channel (DI) indicate common terminal of external DI, which can be connected with positive terminal or negative terminal of 24DC power to match with source-type DI or leakage - type DI.
- 1L and 2L of output channels are power terminals of load driving power, which can be DC supply or AC power supply.
- ' ' indicates no wiring of this channel or no actual physical connection.
- indicates the load voltage is 24VDC or 24-230VAC.

Beijing HollySys Intelligent Technologies Co., Ltd. All Rights Reserved

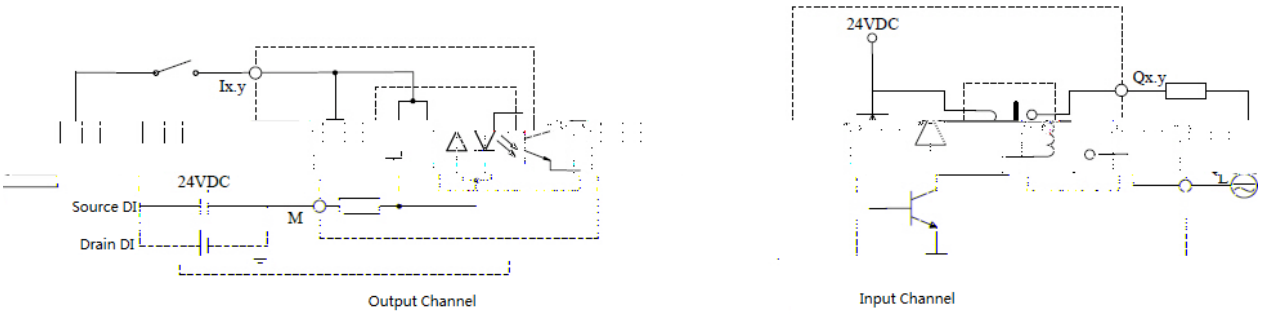

Figure 90 Electrical Schematic Diagram

LE5231 can be connected to the 10-pin hole-base of the previous module via a 10-pin socket. The 10-pin hole-base is connected to the 10-pin socket of latter module and then fix with upper and lower side lock.

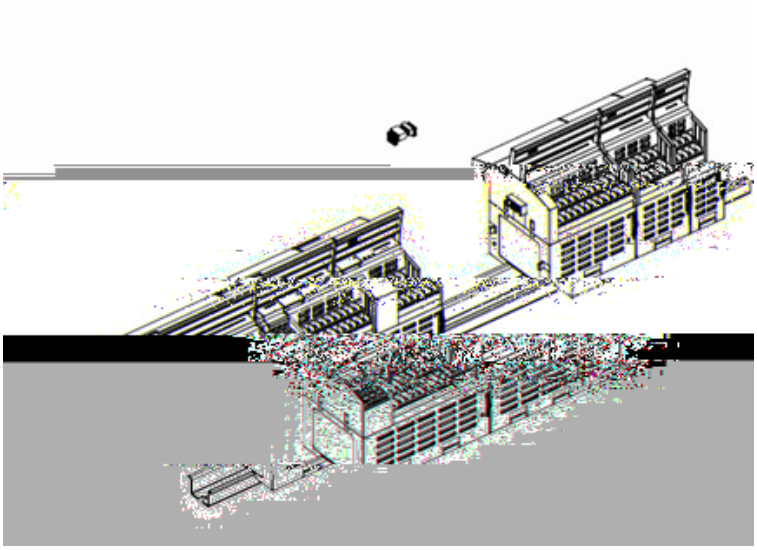

Figure 91 Expansion Connection

Beijing HollySys Intelligent Technologies Co., Ltd. All Rights Reserved

- Ensure all powers are switched off before installing or disassembling module and related equipment.
- After the power supply is connected, the terminal cover shall be fitted on closely, so as to avoid unnecessary personal injury and equipment damage.
- Connect with the matched CPU module and extension module of LE series.

System distributes corresponding bytes diagnosis area for each module to store detailed diagnostic information. If there is module fault report, the user needs to add the variables in the AutoThink software, input the corresponding address, and view the changes of corresponding bit according to the module diagnose information, please refer to Data Storage Area in Chapter 5 in for the detail information.

Beijing HollySys Intelligent Technologies Co., Ltd. All Rights Reserved

LE5310 is an expansion module of LE series PLC and can offer 4 input channels for analog signal.

Table 55 Technical Specifications

Number of inputs		4	+24VDC (supplied by expansion bus)	15mA
Input type		Differential / single-ended	+5VDC (supplied by expansion bus)	95mA
Input range	Voltage	0 10V	Isolation Withstand Voltage	
	Current	0 20 mA /4 20mA	Isolation mode	Optocoupler (channel side to system)
Input accuracy		0.5% of full scale		No isolation between channels
Resolution		12 bits	Isolation withstand voltage	500VAC for 1 minute, leakage current <5mA
Input impedance	Voltage type	>1M	Physical Specifications	
	Current type		Dimensions W x H x D (mm)	70×97×89
Withstand voltage		15V	Weight	213g
Withstand current		32mA	Installation mode	DIN rail mounting or screw mounting
Common mode voltage		Signal voltage + common mode voltage <12V	Operating temperature	-40 70
Common mode rejection ratio		>80dB	Storage temperature	-40 70
Differential mode rejection ratio		>60dB 50Hz and 60Hz	Relative humidity	5%~95% (non-condensing)

Beijing HollySys Intelligent Technologies Co., Ltd. All Rights Reserved

Table 56 Definition of Indicators

Power supply PWR	Green	ON	Power supply works in normal mode.
		OFF	Power is defective or not supplied.
Failure status indicator ERR	Red	ON	The module is in failed mode.
		OFF	No errors occurred or were detected.

- If ERR indicator in CPU module is ON, the diagnosis information is meaningless.

Table 57 Signal Type and Scale Range of Input Channels

		Decimal	Hexadecimal
Voltage signal	0 10V	0 65535	0x0000 0xFFFF
Current signal	0 20mA	0 65535	0x0000 0xFFFF
	4 20mA	0 65535	0x0000 0xFFFF

The 4-channel AI module LE5310 adopts two double-row pluggable terminals (6 X 2 and 6 X 2), and its definition of terminal and typical wiring are shown below.

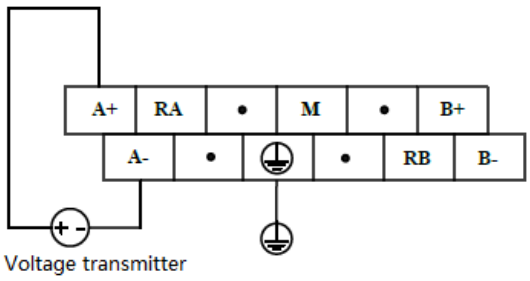

Differential Voltage Type

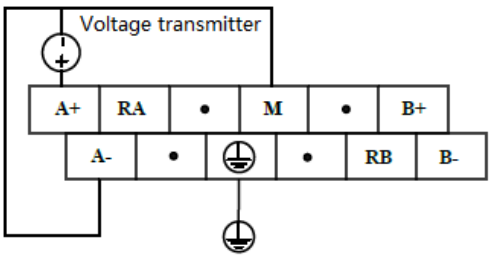

Single-Ended Voltage Type

Beijing HollySys Intelligent Technologies Co., Ltd. All Rights Reserved

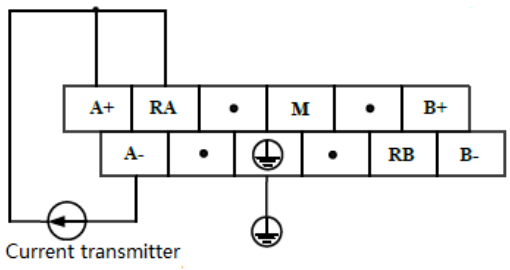

Current Type: Mutual Independence of Signal Negative Pole Connection of Signal Negative Pole

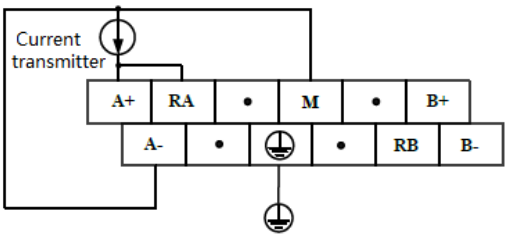

Current Type: Short-circuit

Figure 92 Terminal Wiring Diagram

- LE5310 input channels can accept differential or single-ended voltage signal, or current signal. All 4-channel analog input follows the same rule.
- Differential voltage signal: “A+” connects to positive pole of voltage transmitter, “A-” connects to negative pole of voltage transmitter.
- Single-ended voltage signal: “A+” connects to positive pole of voltage transmitter, “A-” and “M” connect to negative pole of voltage transmitter after short-circuit connection.
- Current signal (mutual independence of negative pole): “RA” and “A+” connects to positive pole of current transmitter after short-circuit connection, “A-” connects to negative pole of current transmitter.
- Current signal (short-circuit connection of negative pole): “RA” and “A+” connects to positive pole of current transmitter after short-circuit connection, “A-” and “M” connect to negative pole of current transmitter after short-circuit connection.
- Figure 93 shows wiring mode of 2-wire and 4-wire type current transmitter, using external power supply or CPU module 24VDC output power supply for transmitter.
- '⏚' means grounding, can be connected to cabinet to offer electrostatic discharging channel for internal analog processing circuit.
- '•' means the channel cannot be connected or connection is not available.

Beijing HollySys Intelligent Technologies Co., Ltd. All Rights Reserved

- Only select one type for each input channel (voltage type or current type), and cannot use both types at the same time.

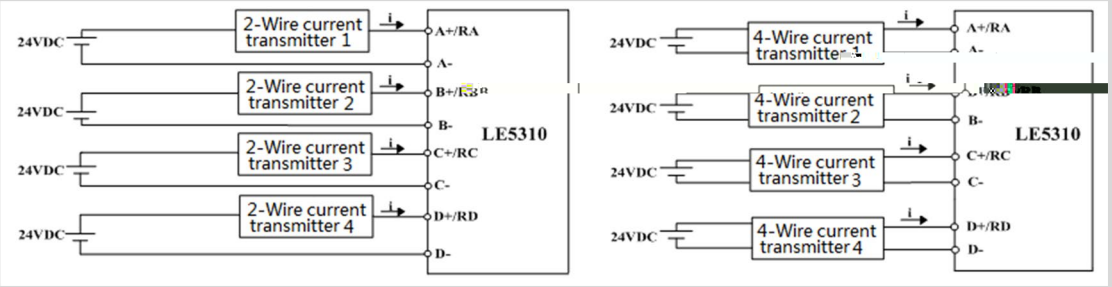

Figure 93 2-wire Type and 4-wire Type Circuit Diagram

In AT programming software, following parameters will be displayed on hardware configuration window when PLC is configured with LE5310.

Module parameter information

Module parameter

Number	name	value	Default value	Maximum	Minimum
1	Filter parameters	64	64		
2	Dead zone value	0	0	4080	0

- Filter Parameters: Users can select based on actual needs. Maximum filtering parameter value is 256, the minimum value is 2, and the default value is 64. The greater value is, the better filtering effect is.
- Dead zone value: The module does not support dead zone.

Channel parameter information

Parameters of channel M2_CH_1

Number	Parameter name	Parameter value	Default value	Maximum	Minimum
1	Channel input signal	4-20mA	4-20mA		
2	Channel enable	Prohibit	Enable		

- Channel parameter: Users select type of input signal according to actual conditions (0-10V/0-20mA /4-20mA), and the default value is 4-20mA.
- Channel enable: Users can select based on actual needs. If the channel is used to measure signals, you will select Enable (default value), otherwise Prohibit.

Beijing HollySys Intelligent Technologies Co., Ltd. All Rights Reserved

LE5311 is an expansion module of LE series PLC and can offer 8 input channels for analog signal.

Table 58 Technical Specifications

Number of inputs		8	+24VDC (supplied by expansion bus)	0mA
Input type		Single-ended	+5VDC (supplied by expansion bus)	75mA
Input range	Voltage	0 10V		

Beijing HollySys Intelligent Technologies Co., Ltd. All Rights Reserved

Table 59 Signal Type and Scale Range of Input Channels

		Decimal	Hexadecimal
Voltage signal	0 10V	0 65535	0x0000 0xFFFF
Current signal	0 20mA	0 65535	0x0000 0xFFFF
	4 20mA	0 65535	0x0000 0xFFFF

The 8-channel analog input module LE5311 adopts two double-row pluggable terminals (6 x 2 and 6 x 2) and its definition of terminal and typical wiring are shown below.

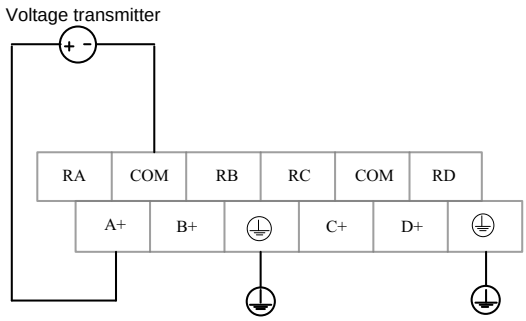

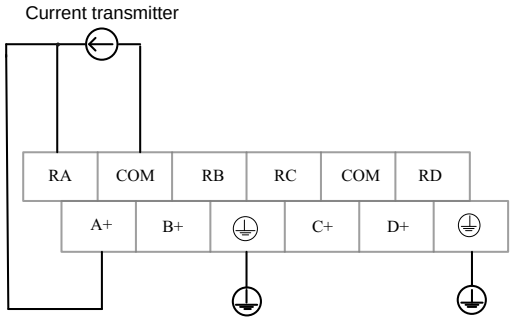

Beijing HollySys Intelligent Technologies Co., Ltd. All Rights Reserved

- LE5311 input channels can accept voltage signal or current signal.
- Voltage signal: “A+” connects to positive pole of voltage transmitter, “COM” connects to negative pole of voltage transmitter. Other channels follow the same rule.
- Current signal: “RA” and “A+” connects to positive pole of current transmitter after short-circuit connection, “COM” connects to negative pole of current transmitter. Other channels follow the same rule.
- The following figure shows wiring mode of 2-wire and 4-wire type current transmitter, using external power supply or CPU module 24VDC output power supply for transmitter.
- '⏚' means grounding, can be connected to cabinet to offer electrostatic discharging channel for internal analog processing circuit.

- Only select one type for each input channel (voltage type or current type), and cannot use both types at the same time.

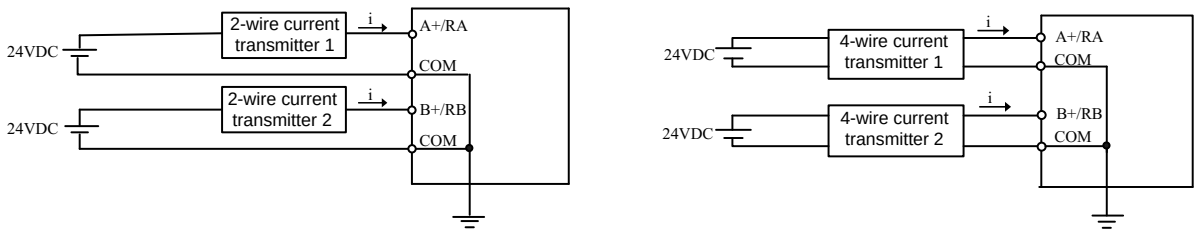

Figure 96 2-wire Type and 4-wire Type Wiring

In AT programming software, following parameters will be displayed on hardware configuration window when PLC is configured with LE5311.

Module parameter information

Module parameter

Number	Name	Value	Default value	Maximum	Minimum
1	Filter parameters	64	64		
2	Dead zone value	0	0	4080	0

Beijing HollySys Intelligent Technologies Co., Ltd. All Rights Reserved

- Filter Parameters: Avai1.4 473.521 0d [/03.8 .(3.8 (r P)-6.u)(3.8u3 (1 Tw 8)]TJ 2, 8)]TJ 4, 8

Beijing HollySys Intelligent Technologies Co., Ltd. All Rights Reserved

Maximum temperature error	-80mV~80mV,0.1%F.S Ambient Temperature (25 ± 2°C), measurement error with internal cold junction compensation; Type S: ±2.5°C; measurement accuracy is ±4°C from -50°C to 200°C; Type R: ±2.5°C; measurement accuracy is ±4°C from -50°C to 200°C; Type B: ±4°C; no guaranteed accuracy for the range 0°C to 300°C, measurement accuracy is ±5°C from 300°C to 500°C; Type K: ±1.6°C; no guaranteed accuracy or resolution for the range (-270°C) to (-200°C); Type N: ±2°C; no guaranteed accuracy or resolution for the range (-270°C) to (-200°C); Type E: ±1.6°C; measurement accuracy is ±6.5°C for the range (-270°C) to (-200°C); Type J: ±1.6°C; Type T: ±2°C; measurement accuracy is ±5°C for the range (-270°C) to (-200°C).		
Input accuracy	0.1% of full scale (voltage signal, 25)	Isolation Withstand Voltage	
		Isolation mode	Magnetic coupling (channel side to system)
Input impedance	M		No isolation between channels
Temperature resolution	0.1	Isolation withstand voltage	500VAC for 1 minute, leakage current <5mA
Cold junction compensation	Supported	Physical Specifications	
Cold junction error	±0.65	Dimensions W x H x D (mm)	70×97×89
Wire break detection	Supported	Weight	216g
Sample refresh time	450ms (every 4 channels)	Installation mode	DIN rail mounting or screw mounting
Temperature floating	±35ppm/	Operating temperature	-20 60
Common mode rejection ratio	>100dB	Storage temperature	-40 70
Differential mode rejection ratio	>50dB	Relative humidity	5%~95% (non-condensing)
Loop resistance of conductor (max.)			

Please refer to Chapter 8.1.2 Definition of Indicators.

Beijing HollySys Intelligent Technologies Co., Ltd. All Rights Reserved

Table 61 Signal Type and Scale Range of Input Channel

Beijing HollySys Intelligent Technologies Co., Ltd. All Rights Reserved

- Terminal A+ and A- are two terminals of one input channel when being connected to external thermocouple. Connection methods of other channels follow the same rule.

  means grounding.

- means the channel cannot be connected or connection is not available.

In AT programming software, following parameters will be displayed on hardware configuration window when PLC is configured with LE5340.

Module Parameter Information

Number	Name	Value	Default value	Maximum	Minimum
Yes	Yes			2	Cold junction compensation
Remain	Remain			3	Disconnection detection

- Filter parameters: Advisable values: 1 (default value), 2, 4, 8, 16 or 32.
- Cold junction compensation: Yes (default), No.
- Disconnection detection:
  - Remain:——maintain current value when wire break error occurs.
  - Positive limit——when wire break error occurs, take the positive limit as 32767.
  - Negative limit——when wire break error occurs, take the negative limit as 32768.

Channel parameter information

Number	Parameter name	Parameter value	Default value	Maximum	Minimum
1	Signal type	J	J		
2	Channel enable	Enable	Enable		

- Signal type: Floating thermocouple type——J, K, T, N, E, R, S, B type.

  Millivolt voltage signal——-80 80mV.

- Channel enable: Enable (default) and Prohibit.

Beijing HollySys Intelligent Technologies Co., Ltd. All Rights Reserved

As a 4-channel RTD input module, LE5341 module is an expansion module of LE series PLC, which can provide an interface connecting to RTD temperature measurement element and is used to acquire and process RTD signal.

Table 62 Technical Specifications

Number of inputs	4	+24VDC (supplied by expansion bus)	0mA
Input type	Refer to signal type and measuring range of input channel	+5VDC (supplied by expansion bus)	80mA
Input range		Isolation Withstand Voltage	
Max. deviation of input		Isolation mode	Magnetic coupling (field side to system)
Input accuracy	0.5% of full scale (25)		No isolation between channels
Wiring mode	Three-wire connection	Isolation withstand voltage	500V AC for 1minute, leakage current <5mA
Temperature drift	±35ppm/	Physical Specifications	
Sampling refresh time	540ms (every 4 channels)	Dimensions W x H x D(mm)	70 X 97X 89
Differential mode rejection ratio	>60dB	Weight	215g
Common mode rejection ratio	>100dB	Mounting mode	DIN rail mounting or screw mounting
Short-circuit detection	Supported	Operating temperature	-40 70
Wire break detection	Supported	Storage temperature	-40 70
Wire length	100m (the longest length away from sensor)	Relative humidity	5%~95% (non-condensing)
Wire loop resistance	Cu50)		

Beijing HollySys Intelligent Technologies Co., Ltd. All Rights Reserved

Power supply PWR	Green	ON	Power supply works in normal mode.
		OFF	Power is defective or not supplied.
Failure status indicator ERR	Red	Flashing	The module is in failed aiis d the mi

Beijing HollySys Intelligent Technologies Co., Ltd. All Rights Reserved

- Three-wire connection: one end of RTD is connected to “E”, the two wires at another end are connected to “S” and “C” respectively.
- ⏚ means grounding.
- • means the channel cannot be connected or connection is not available.

In AT programming software, following parameters will be displayed on hardware configuration window when PLC is configured with LE5341.

Module Parameter Information

Number	Name	Value	Default value	Maximum	Minimum
1	Filter parameters	64	64		
2	Filter mode	50HZ	50HZ		
3	Dead zone value	0	0	4080	0
4	Short circuit detection	Remain	Remain		
5	Disconnection detection	Remain	Remain		
6	Temperature or resistance output	Resistance_Output	Resistance_Output		

- Filter parameters: Advisable values: 2, 4, 8, 16, 32, 64 (default value), 128 and 256.
- Filter mode: 50Hz (default value), 60Hz.
- Dead area value: invalid parameter, no need to set.
- Short circuit detection (Disconnection detection):
  - Remain (default)-- when short circuit (disconnection) fault occurs, hold the current value.
  - Positive limit-- when short circuit (disconnection) fault occurs, temperature output: take the digital code corresponding to the max. temperature value of the RTD. Resistance output: 65535.
  - Negative limit-- when short circuit (disconnection) fault occurs, temperature output: take the digital code value corresponding to the min. temperature value of the RTD. Resistance output: 0.
- Temperature or resistance output: Temperature_Output, Resistance_Output (default)

Channel Parameter Information

Beijing HollySys Intelligent Technologies Co., Ltd. All Rights Reserved

Number	Parameter name	Parameter value	Default value	Maximum	Minimum
1	Signal type	Cu50	Cu50		
2	Channel enable	Enable	Enable		

- Signal type: Refer to signal type and scale range of input channel.
- Channel enable: Enable (default) and Prohibit.

Wire break detection and short circuit detection functions can detect the follows faults:

Table 64 Broken Line Detection and Short-circuit Detection

Wiring mode	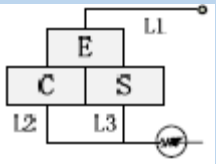 Wire break detection in E terminal	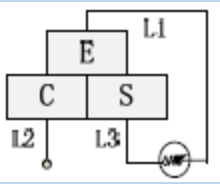 Wire break detection in C terminal	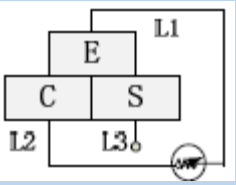 Wire break detection in S terminal	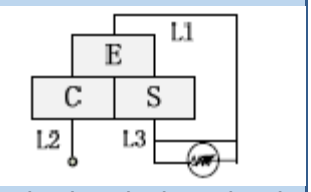 Wire break detection in C terminal and ES short circuit
Type	Wire break detection	Wire break detection	Short circuit detection	Short circuit detection
Wiring mode	Wire break detection in S terminal and EC short circuit	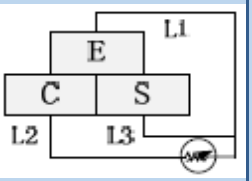 Error wiring	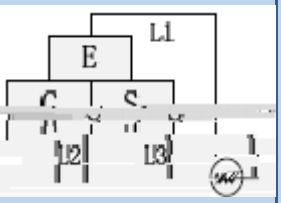 Short circuit detection: all three wires short circuit	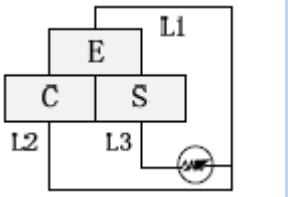 Short circuit detection: EC short circuit

As a 4-channel RTD input module, LE5341T module is an expansion module of LE series PLC, which can provide an interface connecting to RTD temperature measurement element and is used to acquire and process RTD signal. Supported thermal resistance models include: Pt1000(385), Pt1000(3916). Module is only supported for LE5118/LE5119 controller.

Beijing HollySys Intelligent Technologies Co., Ltd. All Rights Reserved

Table 65 Technical Specifications

Number of inputs	4			
Wiring mode	Three-wire connection			
Resistance measurement accuracy	0.5%FS@25 (Pt1000)			
Thermal resistance type	0 Resistance value	Resistance range	Measuring range	Absolute error
Pt 385-1000	1000	185.201~3963.11	-200~870	1.3
Pt 3916-1000	1000	169.960 3277.44	-200~630	1.3
Temperature drift	±35ppm/			
Differential mode rejection ratio	>60dB			
Common mode rejection ratio	>100dB			
Wire length	The maximum distance to the sensor is 100 meters			
Wire loop resistance	20			
Sampling refresh time	690ms(every 4 channels)			
Isolation mode (field side to system)	Magnetic coupling			
Isolation withstand voltage	500VAC,1min@<5mA			
Wire break detection	Supported			
Power supply				
Input voltage	5VDC 2%			
Power consumption	80mA@5VDC (Backplane bus provides)			
Environment condition				
Working temperature	-40 70			
Storage temperature	-40 70			
Relative humidity	5%~95% (non-condensing)			
Dimensions W x H x D(mm)	70mm 97mm 89mm			

Beijing HollySys Intelligent Technologies Co., Ltd. All Rights Reserved

Power supply PWR	Green	ON	Power supply works in normal mode.
		OFF	Power is defective or not supplied.
Failure status indicator ERR	Red	Flashing	The module is in failed mode. .
		OFF	No errors occurred or were detected.

Note : Flashing of error indicator ERR may be caused by the following three reasons:

A/D conversion chip failure.

Disconnected channels.

Over-range or under-range input values.

Table 66 Signal Type and Scale Range of Input Channels

		Ω)			
Pt385-1000	1000	185.201 3963.11	-200 870	±1.3	Displayed resistance: resistance value=digital code value/10 Displayed temperature: temperature=(digital code value-10000)/10
Pt3916-1000	1000	169.960 3277.44	-200 630	±1.3	

Figure 99 Upper Terminal Definition and Wiring Lower

Beijing HollySys Intelligent Technologies Co., Ltd. All Rights Reserved

In AT programming software, following parameters will be displayed on hardware configuration window when PLC is configured with LE5341T.

Module Parameter Information

- Filter parameters:

Beijing HollySys Intelligent Technologies Co., Ltd. All Rights Reserved

Number	Parameter name	Parameter value	Default value	Maximum	Minimum
1	Signal type	Pt1000(385)	Pt1000(385)		
2	Channel enable	Enable	Enable		

- Signal type: Refer to signal type and scale range of input channel.
- Channel enable: Enable (default) and Prohibit.

Wire break detection and short circuit detection functions can detect the follows faults:

Table 67 Broken Line Detection and Short-circuit Detection

Wiring mode	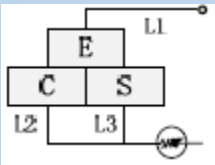 Wire break detection in E terminal	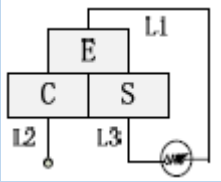 Wire break detection in C terminal	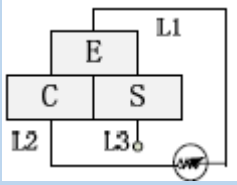 Wire break detection in S terminal	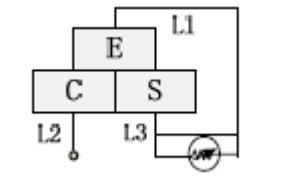 Wire break detection in C terminal and ES short circuit
Type	Wire break detection	Wire break detection	Short circuit detection	Short circuit detection
Wiring mode	Wire break detection in S terminal and EC short circuit	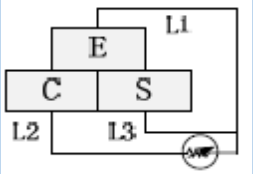 Error wiring	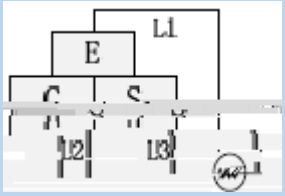 Short circuit detection: all three wires short circuit	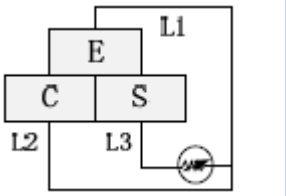 Short circuit detection: EC short circuit

LE5342 is an expansion module of LE series PLC and can offer 8 input channels for thermistor signal.

Beijing HollySys Intelligent Technologies Co., Ltd. All Rights Reserved

Table 68 Technical Specifications

Number of inputs	8		Power source	Power supply via internal bus
Input type	Thermistor		Input voltage	5VDC±2%
NTC type	R is 10K under 25 and B is 3,976		Ripple wave	300mV
Input signal range	-30~130 K		Voltage changing rate	5V/10ms 10uF
Accuracy	-30 80	1	Load capacity	400mA@5VDC
	80 105	2	Current Consumption	
			+24VDC (supplied by expansion bus)	0mA
	105 130	5	+5VDC (supplied by expansion bus)	130mA
			Isolation Withstand Voltage	
Temperature resolution	-30 0	0.5	Channel to system	500VAC for 1min, leaking current <5mA
	0 100	0.1	Channel to channel	No isolation
	100 130	0.5	Physical Specifications	
Temperature drift	±100ppm/		Dimensions W x H x D (mm)	70×97×89
Differential mode rejection ratio	>60dB@50Hz		Installation mode	DIN rail mounting or screw mounting
Sampling refresh time	1s (every 8 channels)		Weight	220g
Wire break detection	Supported		Operating temperature	-40 70
Software filtering	Supported, filtering parameter: 1, 2, 4, 8, 16 and 32 can be chosen.		Storage temperature	-40 70
Error reported time	Synchronization with data		Relative humidity	5%~95% (non-condensing)

Beijing HollySys Intelligent Technologies Co., Ltd. All Rights Reserved

Table 69 Definition of Indicators

ON	OFF	Module is in normal operation.
ON	ON	The module is in failed mode.
OFF	OFF	Power supply failure or module fault.

Table 70 Scale Range

-30 130	-300 1300

- Corresponding relationship between temperature value and digital code value: digital code value= temperature value× 10.

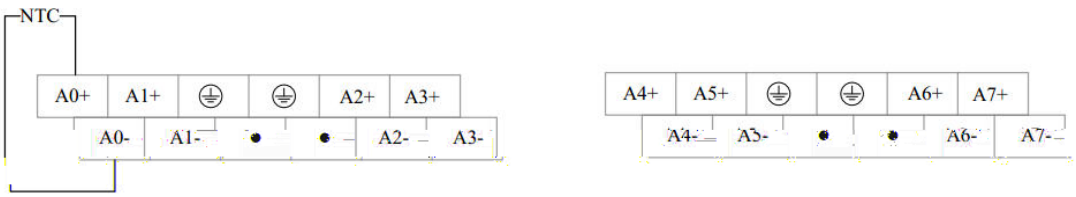

Figure 100 Terminals Schematic

Beijing HollySys Intelligent Technologies Co., Ltd. All Rights Reserved

C and can offer 2 output channels for analog

pecifications

+24VDC (supplied by

Table 72 Definition of Indicators

Power supply PWR	Green	ON	Power supply works in normal mode.
		OFF	Power is defective or not supplied.
Failure status indicator ERR	Red	ON	The module is in failed mode.
		OFF	No errors occurred or were detected.

Note : Generally, module components are damaged or module is powered off.

Table 73 Signal Type and Scale Range of Output Channels

		Decimal	Hexadecimal
Voltage signal	0 10V	0 65535	0x0000 0xFFFF

Beijing HollySys Intelligent Technologies Co., Ltd. All Rights Reserved

Figure 102 Lower Terminal

Table 74 Wiring Terminal Instruction

Vout0	Voltage output channel 1 positive	Iout0	Current output channel 1 positive	COM0	Voltage (current) output channel 1 negative
Vout1	Voltage output channel 2 positive	Iout1	Current output channel 2 positive	COM1	Voltage (current) output channel 2 negative
VI+	External supply 24VDC positive	VI-	External supply 24VDC negative		No connection

ed.c 0 Tw 11.083 0f8

Beijing HollySys Intelligent Technologies Co., Ltd. All Rights Reserved

- Users select type of output signal according to actual conditions (0 10V/0 20 mA /4 20mA). The default value is 4 20mA.
- Users can select based on actual needs. If the channel is used to measure signals, you will select Enable (default value), otherwise Prohibit.

LE5321 module is an expansion module of LE series PLC and can offer 4 output channels for analog signal.

Table 75 Technical Specifications

Number of outputs		4	+24VDC (supplied by expansion bus)	0mA
Output range	Voltage	0 10V	+24VDC (supplied by peripheral device)	Calculated by practical load
	Current	0 20mA /4 20mA	+5VDC (supplied by expansion bus)	45mA
Output accuracy		0.5% of full scale	Physical Characteristics	
Resolution		12 bits	Dimensions W x H x D (mm)	70×97×89

Load

Beijing HollySys Intelligent Technologies Co., Ltd. All Rights Reserved

	system)		condensing)
Isolation withstand voltage	500VAC for 1 minute, leakage current <5mA		

Please refer to Chapter 9.1.2 Definition of Indicators.

Table 76 Signal Type and Range Capacity of Output Channel

		Decimal	Hexadecimal
Voltage signal	0 10V	0 65535	0x0000 0xFFFF
Current signal	0 20mA	0 65535	0x0000 0xFFFF
	4 20mA	0 65535	0x0000 0xFFFF

4-channel analog output module LE5321 adopts two double-row pluggable terminals (6 x 2 and 6 x 2) and its definition of terminal and typical field wiring are show below.

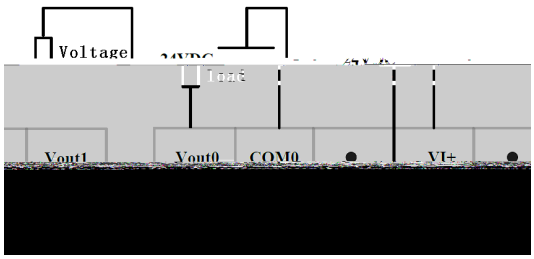

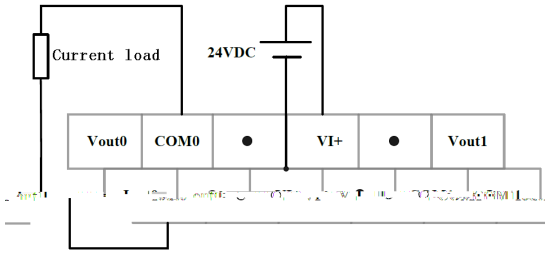

Figure 103 Upper Terminal (Voltage load) Upper Terminal (Current load)

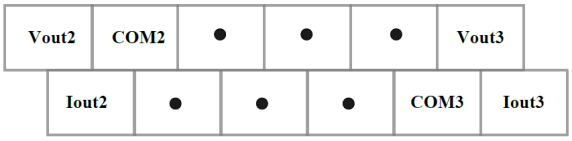

Figure 104 Lower Terminal Definition and Wiring

- Vout0, Vout1, Vout2 and Vout3 are output terminals for external voltage type load.
- Iout0, Iout1, Iout2 and Iout3 are output terminals for external current type load.
- COM0, COM1, COM2 and COM3 are corresponding output common terminals of voltage type and current type.
- ▪ means grounding.
- • means the channel cannot be connected or connection is not available.

- Only select one type for each Output channel (voltage type or current type), and cannot use both at the same time.

Table 77 Terminal Definition and Instructions

Vout0	Voltage output channel 1 positive	Iout0	Current output channel 1 positive	COM0	Voltage (current) output channel 1 negative
Vout1	Voltage output channel 2 positive	Iout1	Current output channel 2 positive	COM1	Voltage (current) output channel 2 negative
Vout2	Voltage output channel 3 positive	Iout2	Current output channel 3 positive	COM2	Voltage (current) output channel 3 negative
Vout3	Voltage output channel 4 positive	Iout3	Current output channel 4 positive	COM3	Voltage (current) output channel 4 negative
VI+	External supply 24VDC positive	VI-	External supply 24VDC negative	•	No connection

In AT programming software, following parameters will be displayed on hardware configuration window when PLC is configured with LE5321.

Beijing HollySys Intelligent Technologies Co., Ltd. All Rights Reserved